TI01271D/06/EN/08.22-00
71574722
2022-08-01

Technical Information
Proline Cubemass C 300

Coriolis flowmeter

Compact sensor for smallest quantities with a compact, easily accessible transmitter

Application

- Measuring principle operates independently of physical fluid properties such as viscosity or density
- Measuring accurately smallest quantities of liquids and gases

Device properties
- Nominal diameter: DN 1 to 6 (1/24 to 1/4")
- Process pressure up to 400 bar (5 800 psi)
- Medium temperature up to +205 °C (+401 °F)
- Compact dual-compartment housing with up to 3 I/Os
- Backlit display with touch control and WLAN access
- Remote display available

Your benefits

- Space-saving installation – compact single-tube design
- Fewer process measuring points – multivariable measurement (flow, density, temperature)
- Suitable for skids – lightweight sensor
- Full access to process and diagnostic information – numerous, freely combinable I/Os and Ethernet
- Reduced complexity and variety – freely configurable I/O functionality
- Integrated verification – Heartbeat Technology

Endress+Hauser
People for Process Automation

Table of contents

About this document

Symbols

Electrical symbols

Symbol	Meaning
⎓	Direct current
∼	Alternating current
≂	Direct current and alternating current
⏚	**Ground connection** A grounded terminal which, as far as the operator is concerned, is grounded via a grounding system.
⏦	**Potential equalization connection (PE: protective earth)** Ground terminals that must be connected to ground prior to establishing any other connections. The ground terminals are located on the interior and exterior of the device: ▪ Interior ground terminal: potential equalization is connected to the supply network. ▪ Exterior ground terminal: device is connected to the plant grounding system.

Communication-specific symbols

Symbol	Meaning
	Wireless Local Area Network (WLAN) Communication via a wireless, local network.
	LED Light emitting diode is off.
	LED Light emitting diode is on.
	LED Light emitting diode is flashing.

Symbols for certain types of information

Symbol	Meaning
	Permitted Procedures, processes or actions that are permitted.
	Preferred Procedures, processes or actions that are preferred.
	Forbidden Procedures, processes or actions that are forbidden.
	Tip Indicates additional information.
	Reference to documentation
	Reference to page
	Reference to graphic
	Visual inspection

Symbols in graphics

Symbol	Meaning
1, 2, 3, ...	Item numbers
1., 2., 3., ...	Series of steps
A, B, C, ...	Views
A-A, B-B, C-C, ...	Sections
EX	Hazardous area
~~EX~~	Safe area (non-hazardous area)
≋➡	Flow direction

Function and system design

Measuring principle

The measuring principle is based on the controlled generation of Coriolis forces. These forces are always present in a system when both translational and rotational movements are superimposed.

$F_c = 2 \cdot \Delta m\ (v \cdot \omega)$

F_c = Coriolis force

Δm = moving mass

ω = rotational velocity

v = radial velocity in rotating or oscillating system

The amplitude of the Coriolis force depends on the moving mass Δm, its velocity v in the system and thus on the mass flow. Instead of a constant rotational velocity ω, the sensor uses oscillation.

In the sensor, an oscillation is produced in the measuring tube. The Coriolis forces produced at the measuring tube loop cause a phase shift in the tube oscillations (see illustration):
- If there is zero flow (i.e. when the fluid stands still), the oscillation measured at points A and B has the same phase (no phase difference) (1).
- Mass flow causes deceleration of the oscillation at the inlet of the tubes (2) and acceleration at the outlet (3).

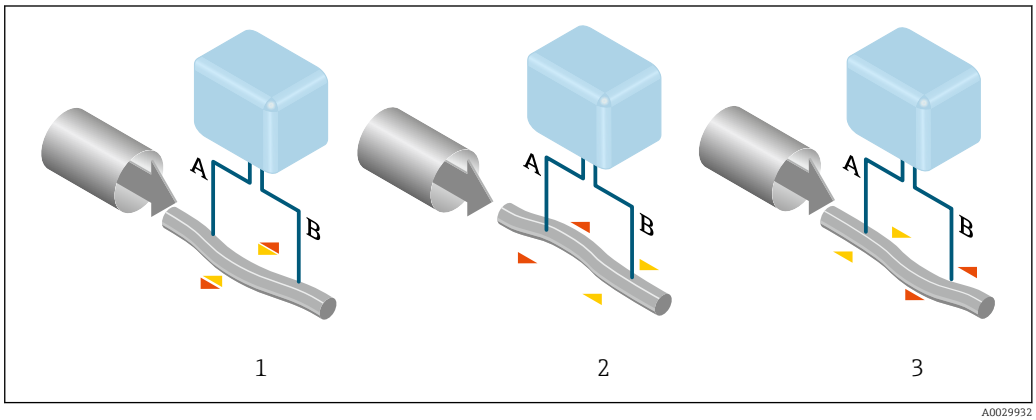

A0029932

The phase difference (A-B) increases with increasing mass flow. Electrodynamic sensors register the tube oscillations at the inlet and outlet. System balance is ensured by the antiphase oscillation of the two pipe tubes. The measuring principle operates independently of temperature, pressure, viscosity, conductivity and flow profile.

Density measurement
The measuring tube is continuously excited at its resonance frequency. A change in the mass and thus the density of the oscillating system (comprising measuring tube and fluid) results in a corresponding, automatic adjustment in the oscillation frequency. The resonance frequency is thus a function of the medium density. The microprocessor utilizes this relationship to obtain a density signal.

Volume measurement
Together with the measured mass flow, this is used to calculate the volume flow.

Temperature measurement
The temperature of the measuring tube is determined in order to calculate the compensation factor due to temperature effects. This signal corresponds to the process temperature and is also available as an output signal.

Gas Fraction Handler (GFH)
The Gas Fraction Handler is a Promass software function that improves measurement stability and repeatability. The function continuously checks for the presence of disturbances in single-phase flow, i.e. gas bubbles in liquids or droplets in gas. In the presence of the second phase, flow and density become increasingly unstable. The Gas Fraction Handler function improves measurement stability with respect to the severity of the disturbances, without any effect under single-phase flow conditions.

The Gas Fraction Handler is only available in device versions with HART, Modbus RS485, PROFINET and PROFINET with Ethernet-APL.

For detailed information on the Gas Fraction Handler, see the Special Documentation for "Gas Fraction Handler" → 📄 99

Measuring system

The device consists of a transmitter and a sensor.

The device is available as a compact version:
The transmitter and sensor form a mechanical unit.

Transmitter

Proline 300 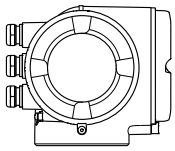 A0026708	Device versions and materials: ▪ Transmitter housing Aluminum, coated: aluminum, AlSi10Mg, coated ▪ Material of window in transmitter housing: Aluminum, coated: glass Configuration: ▪ External operation via 4-line, illuminated graphic local display (LCD) with touch control and guided menus ("Make-it-run" wizards) for application-specific commissioning. ▪ Via service interface or WLAN interface: ▪ Operating tools (e.g. FieldCare, DeviceCare) ▪ Web server (access via Web browser, e.g. Microsoft Internet Explorer, Microsoft Edge)

Sensor

Cubemass C  A0029825	The ultra compact, bent single-tube system for minimum flow rates and high pressure ▪ Simultaneous measurement of flow, volume flow, density and temperature (multivariable) ▪ Immune to process influences ▪ Nominal diameter range: DN 1 to 6 (1/24 to 1/4 ") ▪ Materials: ▪ Sensor: stainless steel, 1.4301 (304) ▪ Measuring tube: stainless steel, 1.4539 (904L) ▪ Process connections: stainless steel, 1.4404 (316/316L); 1.4539 (904L)

Equipment architecture

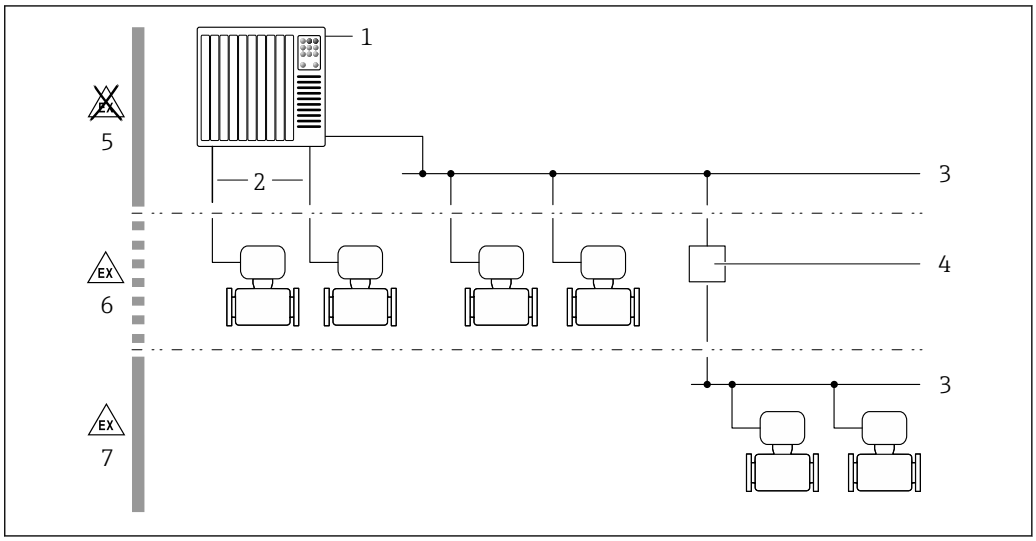

1 Possibilities for integrating measuring devices into a system

1 *Control system (e.g. PLC)*
2 *Connecting cable (0/4 to 20 mA HART etc.)*
3 *Fieldbus*
4 *Coupler*
5 *Non-hazardous area*
6 *Hazardous area: Zone 2; Class I, Division 2*
7 *Hazardous area: Zone 1; Class I, Division 1*

Security

IT security

Our warranty is valid only if the product is installed and used as described in the Operating Instructions. The product is equipped with security mechanisms to protect it against any inadvertent changes to the settings.

IT security measures, which provide additional protection for the product and associated data transfer, must be implemented by the operators themselves in line with their security standards.

Device-specific IT security

The device offers a range of specific functions to support protective measures on the operator's side. These functions can be configured by the user and guarantee greater in-operation safety if used correctly. An overview of the most important functions is provided in the following section:

Function/interface	Factory setting	Recommendation
Write protection via hardware write protection switch → 🗎 8	Not enabled	On an individual basis following risk assessment
Access code (also applies for Web server login or FieldCare connection) → 🗎 8	Not enabled (0000)	Assign a customized access code during commissioning
WLAN (order option in display module)	Enabled	On an individual basis following risk assessment
WLAN security mode	Enabled (WPA2-PSK)	Do not change
WLAN passphrase (password) → 🗎 8	Serial number	Assign a customized WLAN passphrase during commissioning
WLAN mode	Access point	On an individual basis following risk assessment
Web server → 🗎 8	Enabled	On an individual basis following risk assessment
CDI-RJ45 service interface → 🗎 9	–	On an individual basis following risk assessment

Protecting access via hardware write protection

Write access to the parameters of the device via the local display, Web browser or operating tool (e.g. FieldCare, DeviceCare) can be disabled via a write protection switch (DIP switch on the main electronics module). When hardware write protection is enabled, only read access to the parameters is possible.

Hardware write protection is disabled when the device is delivered.

Protecting access via a password

Different passwords are available to protect write access to the device parameters or access to the device via the WLAN interface.

- User-specific access code
  Protect write access to the device parameters via the local display, Web browser or operating tool (e.g. FieldCare, DeviceCare). Access authorization is clearly regulated through the use of a user-specific access code.
- WLAN passphrase
  The network key protects a connection between an operating unit (e.g. notebook or tablet) and the device via the WLAN interface which can be ordered as an option.
- Infrastructure mode
  When the device is operated in infrastructure mode, the WLAN passphrase corresponds to the WLAN passphrase configured on the operator side.

User-specific access code

Write access to the device parameters via the local display, Web browser or operating tool (e.g. FieldCare, DeviceCare) can be protected by the modifiable, user-specific access code.

WLAN passphrase: Operation as WLAN access point

A connection between an operating unit (e.g. notebook or tablet) and the device via the WLAN interface, which can be ordered as an optional extra, is protected by the network key. The WLAN authentication of the network key complies with the IEEE 802.11 standard.

When the device is delivered, the network key is pre-defined depending on the device. It can be changed via the **WLAN settings** submenu in the **WLAN passphrase** parameter.

Infrastructure mode

A connection between the device and WLAN access point is protected by means of an SSID and passphrase on the system side. Please contact the relevant system administrator for access.

General notes on the use of passwords

- The access code and network key supplied with the device should be changed during commissioning.
- Follow the general rules for generating a secure password when defining and managing the access code or network key.
- The user is responsible for the management and careful handling of the access code and network key.

Access via Web server

The device can be operated and configured via a Web browser with the integrated Web server. The connection is via the service interface (CDI-RJ45) or the WLAN interface. For device versions with the EtherNet/IP and PROFINET communication protocols, the connection can also be established via the terminal connection for signal transmission with EtherNet/IP, PROFINET (RJ45 plug) or PROFINET with Ethernet-APL (two-wire).

The Web server is enabled when the device is delivered. The Web server can be disabled if necessary (e.g. after commissioning) via the **Web server functionality** parameter.

The device and status information can be hidden on the login page. This prevents unauthorized access to the information.

For detailed information on device parameters, see:
The "Description of Device Parameters" document → 98

Access via OPC-UA

The "OPC UA Server" application package is available in the device version with the HART communication protocol → 95.

The device can communicate with OPC UA clients using the "OPC UA Server" application package.

The OPC UA server integrated in the device can be accessed via the WLAN access point using the WLAN interface - which can be ordered as an optional extra - or the service interface (CDI- RJ45) via Ethernet network. Access rights and authorization as per separate configuration.

The following Security Modes are supported as per the OPC UA Specification (IEC 62541):
- None
- Basic128Rsa15 – signed
- Basic128Rsa15 – signed and encrypted

Access via service interface (CDI-RJ45)

The device can be connected to a network via the service interface (CDI-RJ45). Device-specific functions guarantee the secure operation of the device in a network.

The use of relevant industrial standards and guidelines that have been defined by national and international safety committees, such as IEC/ISA62443 or the IEEE, is recommended. This includes organizational security measures such as the assignment of access authorization as well as technical measures such as network segmentation.

Transmitters with an Ex de approval may not be connected via the service interface (CDI-RJ45)!

Order code for "Approval transmitter + sensor", options (Ex de): BA, BB, C1, C2, GA, GB, MA, MB, NA, NB

The device can be incorporated into a ring topology. The device is integrated via the terminal connection for signal transmission (output 1) and the connection to the service interface (CDI-RJ45) .

Input

Measured variable

Direct measured variables

- Mass flow
- Density
- Temperature

Calculated measured variables

- Volume flow
- Corrected volume flow
- Reference density

Measuring range

Measuring range for liquids

DN		Measuring range full scale values $\dot{m}_{min(F)}$ to $\dot{m}_{max(F)}$	
[mm]	[in]	[kg/h]	[lb/min]
1	1/24	0 to 20	0 to 0.735
2	1/12	0 to 100	0 to 3.675
4	1/8	0 to 450	0 to 16.54
6	1/4	0 to 1000	0 to 36.75

Measuring range for gases

The full scale value depends on the density and the sound velocity of the gas used. The full scale value can be calculated with the following formulas:

$\dot{m}_{max(G)}$ = minimum of $(\dot{m}_{max(F)} \cdot \rho_G : x)$ and

$(\rho_G \cdot (c_G/2) \cdot d_i^2 \cdot (\pi/4) \cdot 3600 \cdot n)$

$\dot{m}_{max(G)}$	Maximum full scale value for gas [kg/h]
$\dot{m}_{max(F)}$	Maximum full scale value for liquid [kg/h]
$\dot{m}_{max(G)} < \dot{m}_{max(F)}$	$\dot{m}_{max(G)}$ can never be greater than $\dot{m}_{max(F)}$
ρ_G	Gas density in [kg/m³] at operating conditions
x	Limitation constant for max. gas flow [kg/m³]
c_G	Sound velocity (gas) [m/s]
d_i	Measuring tube internal diameter [m]
π	Pi
n = 1	Number of measuring tubes

DN		x
[mm]	[in]	[kg/m³]
1	1/24	20
2	1/12	20
4	1/8	20
6	1/4	20

To calculate the measuring range, use the *Applicator* sizing tool → 📄 97

If calculating the full scale value using the two formulas:

1. Calculate the full scale value with both formulas.
2. The smaller value is the value that must be used.

Recommended measuring range

Flow limit → 61

Operable flow range

Over 1000 : 1.

Flow rates above the preset full scale value do not override the electronics unit, with the result that the totalizer values are registered correctly.

Input signal

Output and input variants

→ 13

External measured values

To increase the accuracy of certain measured variables or to calculate the corrected volume flow for gases, the automation system can continuously write different measured values to the measuring device:
- Operating pressure to increase accuracy (Endress+Hauser recommends the use of a pressure measuring device for absolute pressure, e.g. Cerabar M or Cerabar S)
- Medium temperature to increase accuracy (e.g. iTEMP)
- Reference density for calculating the corrected volume flow for gases

Various pressure and temperature measuring devices can be ordered from Endress+Hauser: see "Accessories" section → 97

It is recommended to read in external measured values to calculate the corrected volume flow.

HART protocol

The measured values are written from the automation system to the measuring device via the HART protocol. The pressure transmitter must support the following protocol-specific functions:
- HART protocol
- Burst mode

Current input

The measured values are written from the automation system to the measuring device via the current input → 11.

Digital communication

The measured values can be written by the automation system via:
- FOUNDATION Fieldbus
- PROFIBUS DP
- PROFIBUS PA
- Modbus RS485
- EtherNet/IP
- PROFINET
- PROFINET with Ethernet-APL

Current input 0/4 to 20 mA

Current input	0/4 to 20 mA (active/passive)
Current span	▪ 4 to 20 mA (active) ▪ 0/4 to 20 mA (passive)
Resolution	1 µA
Voltage drop	Typically: 0.6 to 2 V for 3.6 to 22 mA (passive)
Maximum input voltage	≤ 30 V (passive)

Open-circuit voltage	≤ 28.8 V (active)
Possible input variables	▪ Pressure ▪ Temperature ▪ Density

Status input

Maximum input values	▪ DC −3 to 30 V ▪ If status input is active (ON): R_i >3 kΩ
Response time	Configurable: 5 to 200 ms
Input signal level	▪ Low signal: DC −3 to +5 V ▪ High signal: DC 12 to 30 V
Assignable functions	▪ Off ▪ Reset the individual totalizers separately ▪ Reset all totalizers ▪ Flow override

Output

Output and input variants

Depending on the option selected for output/input 1, different options are available for the other outputs and inputs. Only one option can be selected for each output/input 1 to 3. The following tables must be read vertically (↓).

Example: If the option BA "4–20 mA HART" was selected for output/input 1, one of the options A, B, D, E, F, H, I or J is available for output 2 and one of the options A, B, D, E, F, H, I or J is available for output 3.

Output/input 1 and options for output/input 2

Options for output/input 3 → 14

Order code for "Output; input 1" (020) →	Possible options												
Current output 4 to 20 mA HART	BA												
Current output 4 to 20 mA HART Ex i passive	↓	CA											
Current output 4 to 20 mA HART Ex i active		↓	CC										
FOUNDATION Fieldbus			↓	SA									
FOUNDATION Fieldbus Ex i				↓	TA								
PROFIBUS DP					↓	LA							
PROFIBUS PA						↓	GA						
PROFIBUS PA Ex i							↓	HA					
Modbus RS485								↓	MA				
EtherNet/IP 2-port switch integrated									↓	NA			
PROFINET 2-port switch integrated										↓	RA		
PROFINET with Ethernet-APL											↓	RB	
PROFINET with Ethernet-APL Ex i												↓	RC
Order code for "Output; input 2" (021) →	↓	↓	↓	↓	↓	↓	↓	↓	↓	↓	↓	↓	↓
Not assigned	A	A	A	A	A	A	A	A	A	A	A	A	A
Current output 4 to 20 mA	B			B		B	B		B	B	B	B	
Current output 4 to 20 mA Ex i passive		C	C		C			C					C
User-configurable input/output [1]	D			D		D	D		D	D	D	D	
Pulse/frequency/switch output	E			E		E	E		E	E	E	E	
Double pulse output [2]	F								F				
Pulse/frequency/switch output Ex i passive		G	G		G			G					G
Relay output	H			H		H	H		H	H	H	H	
Current input 0/4 to 20 mA	I			I		I	I		I	I	I	I	
Status input	J			J		J	J		J	J	J	J	

1) A specific input or output can be assigned to a user-configurable input/output → 20.
2) If double pulse output (F) is selected for output/input 2 (021), only the double pulse output (F) option is available for selection for output/input 3 (022).

Output/input 1 and options for output/input 3

Options for output/input 2 → 13

Order code for "Output; input 1" (020) →	Possible options												
Current output 4 to 20 mA HART	BA												
Current output 4 to 20 mA HART Ex i passive	↓	CA											
Current output 4 to 20 mA HART Ex i active		↓	CC										
FOUNDATION Fieldbus			↓	SA									
FOUNDATION Fieldbus Ex i				↓	TA								
PROFIBUS DP					↓	LA							
PROFIBUS PA						↓	GA						
PROFIBUS PA Ex i							↓	HA					
Modbus RS485								↓	MA				
EtherNet/IP 2-port switch integrated									↓	NA			
PROFINET 2-port switch integrated										↓	RA		
PROFINET with Ethernet-APL											↓	RB	
PROFINET with Ethernet-APL Ex i												↓	RC
Order code for "Output; input 3" (022) →	↓	↓	↓	↓	↓	↓	↓	↓	↓	↓	↓	↓	↓
Not assigned	A	A	A	A	A	A	A	A	A	A	A	A	A
Current output 4 to 20 mA	B					B			B	B	B	B	
Current output 4 to 20 mA Ex i passive		C	C										
User-configurable input/output	D					D			D	D	D	D	
Pulse/frequency/switch output	E					E			E	E	E	E	
Double pulse output (slave) [1]	F								F				
Pulse/frequency/switch output Ex i passive		G	G										
Relay output	H					H			H	H	H	H	
Current input 0/4 to 20 mA	I					I			I	I	I	I	
Status input	J					J			J	J	J	J	

1) If double pulse output (F) is selected for output/input 2 (021), only the double pulse output (F) option is available for output/input 3 (022).

Output signal

Current output 4 to 20 mA HART

Order code	"Output; input 1" (20): Option BA: current output 4 to 20 mA HART
Signal mode	Can be set to: ▪ Active ▪ Passive
Current range	Can be set to: ▪ 4 to 20 mA NAMUR ▪ 4 to 20 mA US ▪ 4 to 20 mA ▪ 0 to 20 mA (only if the signal mode is active) ▪ Fixed current
Open-circuit voltage	DC 28.8 V (active)
Maximum input voltage	DC 30 V (passive)
Load	250 to 700 Ω
Resolution	0.38 µA
Damping	Configurable: 0 to 999.9 s
Assignable measured variables	▪ Mass flow ▪ Volume flow ▪ Corrected volume flow ▪ Density ▪ Reference density ▪ Temperature ▪ Electronics temperature ▪ Oscillation frequency 0 ▪ Oscillation damping 0 ▪ Signal asymmetry ▪ Exciter current 0 ℹ The range of options increases if the measuring device has one or more application packages.

Current output 4 to 20 mA HART Ex i

Order code	"Output; input 1" (20) choose from: ▪ Option CA: current output 4 to 20 mA HART Ex i passive ▪ Option CC: current output 4 to 20 mA HART Ex i active
Signal mode	Depends on the selected order version.
Current range	Can be set to: ▪ 4 to 20 mA NAMUR ▪ 4 to 20 mA US ▪ 4 to 20 mA ▪ 0 to 20 mA (only if the signal mode is active) ▪ Fixed current
Open-circuit voltage	DC 21.8 V (active)
Maximum input voltage	DC 30 V (passive)
Load	▪ 250 to 400 Ω (active) ▪ 250 to 700 Ω (passive)
Resolution	0.38 µA

Damping	Configurable: 0 to 999.9 s
Assignable measured variables	▪ Mass flow ▪ Volume flow ▪ Corrected volume flow ▪ Density ▪ Reference density ▪ Temperature ▪ Electronics temperature ▪ Oscillation frequency 0 ▪ Oscillation damping 0 ▪ Signal asymmetry ▪ Exciter current 0 The range of options increases if the measuring device has one or more application packages.

FOUNDATION Fieldbus

FOUNDATION Fieldbus	H1, IEC 61158-2, galvanically isolated
Data transfer	31.25 kbit/s
Current consumption	10 mA
Permitted supply voltage	9 to 32 V
Bus connection	With integrated reverse polarity protection

PROFIBUS DP

Signal encoding	NRZ code
Data transfer	9.6 kBaud…12 MBaud
Terminating resistor	Integrated, can be activated via DIP switches

PROFIBUS PA

PROFIBUS PA	In accordance with EN 50170 Volume 2, IEC 61158-2 (MBP), galvanically isolated
Data transmission	31.25 kbit/s
Current consumption	10 mA
Permitted supply voltage	9 to 32 V
Bus connection	With integrated reverse polarity protection

Modbus RS485

Physical interface	RS485 in accordance with EIA/TIA-485 standard
Terminating resistor	Integrated, can be activated via DIP switches

EtherNet/IP

Standards	In accordance with IEEE 802.3

PROFINET

Standards	In accordance with IEEE 802.3

PROFINET with Ethernet-APL

Device use	**Device connection to an APL field switch** The device may only be operated according to the following APL port classifications: ▪ If used in hazardous areas: SLAA or SLAC [1)] ▪ If used in non-hazardous areas: SLAX Connection values of APL field switch (corresponds to APL port classification SPCC or SPAA, for instance): ▪ Maximum input voltage: 15 V_{DC} ▪ Minimum output values: 0.54 W **Device connection to an SPE switch** The device may only be operated according to the following PoDL power class: If used in the non-hazardous area: PoDL power class 10 Connection values of SPE switch (corresponds to PoDL power class 10, 11 or 12): ▪ Maximum input voltage: 30 V_{DC} ▪ Minimum output values: 1.85 W
PROFINET	According to IEC 61158 and IEC 61784
Ethernet-APL	According to IEEE 802.3cg, APL port profile specification v1.0, galvanically isolated
Data transfer	10 Mbit/s
Current consumption	**Transmitter** ▪ Max. 400 mA(24 V) ▪ Max. 200 mA (110 V, 50/60 Hz; 230 V, 50/60 Hz)
Permitted supply voltage	9 to 30 V
Network connection	With integrated reverse polarity protection

1) For more information on using the device in the hazardous area, see the Ex-specific Safety Instructions

Current output 4 to 20 mA

Order code	"Output; input 2" (21), "Output; input 3" (022): Option B: current output 4 to 20 mA
Signal mode	Can be set to: ▪ Active ▪ Passive
Current span	Can be set to: ▪ 4 to 20 mA NAMUR ▪ 4 to 20 mA US ▪ 4 to 20 mA ▪ 0 to 20 mA (only if the signal mode is active) ▪ Fixed current
Maximum output values	22.5 mA
Open-circuit voltage	DC 28.8 V (active)
Maximum input voltage	DC 30 V (passive)
Load	0 to 700 Ω
Resolution	0.38 µA

Damping	Configurable: 0 to 999.9 s
Assignable measured variables	▪ Mass flow ▪ Volume flow ▪ Corrected volume flow ▪ Density ▪ Reference density ▪ Temperature ▪ Electronics temperature ▪ Oscillation frequency 0 ▪ Oscillation damping 0 ▪ Signal asymmetry ▪ Exciter current 0 The range of options increases if the measuring device has one or more application packages.

Current output 4 to 20 mA Ex i passive

Order code	"Output; input 2" (21), "Output; input 3" (022): Option C: current output 4 to 20 mA Ex i passive
Signal mode	Passive
Current span	Can be set to: ▪ 4 to 20 mA NAMUR ▪ 4 to 20 mA US ▪ 4 to 20 mA ▪ Fixed current
Maximum output values	22.5 mA
Maximum input voltage	DC 30 V
Load	0 to 700 Ω
Resolution	0.38 µA
Damping	Configurable: 0 to 999 s
Assignable measured variables	▪ Mass flow ▪ Volume flow ▪ Corrected volume flow ▪ Density ▪ Reference density ▪ Temperature ▪ Electronics temperature ▪ Oscillation frequency 0 ▪ Oscillation damping 0 ▪ Signal asymmetry ▪ Exciter current 0 The range of options increases if the measuring device has one or more application packages.

Pulse/frequency/switch output

Function	Can be configured as pulse, frequency or switch output
Version	Open collector Can be set to: ▪ Active ▪ Passive ▪ Passive NAMUR Ex-i, passive
Maximum input values	DC 30 V, 250 mA (passive)
Open-circuit voltage	DC 28.8 V (active)
Voltage drop	For 22.5 mA: ≤ DC 2 V

Pulse output	
Maximum input values	DC 30 V, 250 mA (passive)
Maximum output current	22.5 mA (active)
Open-circuit voltage	DC 28.8 V (active)
Pulse width	Configurable: 0.05 to 2 000 ms
Maximum pulse rate	10 000 Impulse/s
Pulse value	Configurable
Assignable measured variables	▪ Mass flow ▪ Volume flow ▪ Corrected volume flow
Frequency output	
Maximum input values	DC 30 V, 250 mA (passive)
Maximum output current	22.5 mA (active)
Open-circuit voltage	DC 28.8 V (active)
Output frequency	Configurable: end value frequency 2 to 10 000 Hz(f_{max} = 12 500 Hz)
Damping	Configurable: 0 to 999.9 s
Pulse/pause ratio	1:1
Assignable measured variables	▪ Mass flow ▪ Volume flow ▪ Corrected volume flow ▪ Density ▪ Reference density ▪ Temperature ▪ Electronics temperature ▪ Oscillation frequency 0 ▪ Oscillation damping 0 ▪ Signal asymmetry ▪ Exciter current 0 ℹ The range of options increases if the measuring device has one or more application packages.
Switch output	
Maximum input values	DC 30 V, 250 mA (passive)
Open-circuit voltage	DC 28.8 V (active)
Switching behavior	Binary, conductive or non-conductive
Switching delay	Configurable: 0 to 100 s
Number of switching cycles	Unlimited

Assignable functions	▪ Off
	▪ On
	▪ Diagnostic behavior
	▪ Limit value
	  ▪ Mass flow
	  ▪ Volume flow
	  ▪ Corrected volume flow
	  ▪ Density
	  ▪ Reference density
	  ▪ Temperature
	  ▪ Totalizer 1-3
	▪ Flow direction monitoring
	▪ Status
	  ▪ Partially filled pipe detection
	  ▪ Low flow cut off
	ℹ The range of options increases if the measuring device has one or more application packages.

Double pulse output

Function	Double pulse
Version	Open collector Can be set to: ▪ Active ▪ Passive ▪ Passive NAMUR
Maximum input values	DC 30 V, 250 mA (passive)
Open-circuit voltage	DC 28.8 V (active)
Voltage drop	For 22.5 mA: ≤ DC 2 V
Output frequency	Configurable: 0 to 1 000 Hz
Damping	Configurable: 0 to 999 s
Pulse/pause ratio	1:1
Assignable measured variables	▪ Mass flow ▪ Volume flow ▪ Corrected volume flow ▪ Density ▪ Reference density ▪ Temperature The range of options increases if the measuring device has one or more application packages.

Relay output

Function	Switch output
Version	Relay output, galvanically isolated
Switching behavior	Can be set to: ▪ NO (normally open), factory setting ▪ NC (normally closed)
Maximum switching capacity (passive)	▪ DC 30 V, 0.1 A ▪ AC 30 V, 0.5 A

Assignable functions	▪ Off
	▪ On
	▪ Diagnostic behavior
	▪ Limit value
	  ▪ Mass flow
	  ▪ Volume flow
	  ▪ Corrected volume flow
	  ▪ Density
	  ▪ Reference density
	  ▪ Temperature
	  ▪ Totalizer 1-3
	▪ Flow direction monitoring
	▪ Status
	  ▪ Partially filled pipe detection
	  ▪ Low flow cut off
	The range of options increases if the measuring device has one or more application packages.

User-configurable input/output

One specific input or output is assigned to a user-configurable input/output (configurable I/O) during device commissioning.

The following inputs and outputs are available for assignment:
- Choice of current output: 4 to 20 mA (active), 0/4 to 20 mA (passive)
- Pulse/frequency/switch output
- Choice of current input: 4 to 20 mA (active), 0/4 to 20 mA (passive)
- Status input

The technical values correspond to those of the inputs and outputs described in this section.

Signal on alarm

Depending on the interface, failure information is displayed as follows:

HART current output

Device diagnostics	Device condition can be read out via HART Command 48

PROFIBUS PA

Status and alarm messages	Diagnostics in accordance with PROFIBUS PA Profile 3.02
Failure current FDE (Fault Disconnection Electronic)	0 mA

PROFIBUS DP

Status and alarm messages	Diagnostics in accordance with PROFIBUS PA Profile 3.02

EtherNet/IP

Device diagnostics	Device condition can be read out in Input Assembly

PROFINET

Device diagnostics	According to "Application Layer protocol for decentralized periphery", Version 2.3

PROFINET with Ethernet-APL

Device diagnostics	Diagnostics according to PROFINET PA Profile 4

FOUNDATION Fieldbus

Status and alarm messages	Diagnostics in accordance with FF-891
Failure current FDE (Fault Disconnection Electronic)	0 mA

Modbus RS485

Failure mode	Choose from: - NaN value instead of current value - Last valid value

Current output 0/4 to 20 mA

4 to 20 mA

Failure mode	Choose from: ▪ 4 to 20 mA in accordance with NAMUR recommendation NE 43 ▪ 4 to 20 mA in accordance with US ▪ Min. value: 3.59 mA ▪ Max. value: 22.5 mA ▪ Freely definable value between: 3.59 to 22.5 mA ▪ Actual value ▪ Last valid value

0 to 20 mA

Failure mode	Choose from: ▪ Maximum alarm: 22 mA ▪ Freely definable value between: 0 to 20.5 mA

Pulse/frequency/switch output

Pulse output	
Failure mode	Choose from: ▪ Actual value ▪ No pulses
Frequency output	
Failure mode	Choose from: ▪ Actual value ▪ 0 Hz ▪ Defined value (f_{max} 2 to 12 500 Hz)
Switch output	
Failure mode	Choose from: ▪ Current status ▪ Open ▪ Closed

Relay output

Failure mode	Choose from: ▪ Current status ▪ Open ▪ Closed

Local display

Plain text display	With information on cause and remedial measures
Backlight	Red backlighting indicates a device error.

Status signal as per NAMUR recommendation NE 107

Interface/protocol

- Via digital communication:
  - HART protocol
  - FOUNDATION Fieldbus
  - PROFIBUS PA
  - PROFIBUS DP
  - Modbus RS485
  - EtherNet/IP
  - PROFINET
  - PROFINET with Ethernet-APL
- Via service interface
  - CDI-RJ45 service interface
  - WLAN interface

Plain text display	With information on cause and remedial measures

Web browser

Plain text display	With information on cause and remedial measures

Light emitting diodes (LED)

Status information	Status indicated by various light emitting diodes The following information is displayed depending on the device version: ▪ Supply voltage active ▪ Data transmission active ▪ Device alarm/error has occurred ▪ EtherNet/IP network available ▪ EtherNet/IP connection established ▪ PROFINET network available ▪ PROFINET connection established ▪ PROFINET blinking feature

Load

Output signal → 🗎 15

Ex connection data

Safety-related values

Order code for "Output; input 1"	Output type	Safety-related values "Output; input 1"	
		26 (+)	27 (–)
Option **BA**	Current output 4 to 20 mA HART	U_N = 30 V_{DC} U_M = 250 V_{AC}	
Option **GA**	PROFIBUS PA	U_N = 32 V_{DC} U_M = 250 V_{AC}	
Option **LA**	PROFIBUS DP	U_N = 32 V_{DC} U_M = 250 V_{AC}	
Option **MA**	Modbus RS485	U_N = 30 V_{DC} U_M = 250 V_{AC}	
Option **SA**	FOUNDATION Fieldbus	U_N = 32 V_{DC} U_M = 250 V_{AC}	
Option **NA**	EtherNet/IP	U_N = 30 V_{DC} U_M = 250 V_{AC}	

Order code for "Output; input 1"	Output type	Safety-related values "Output; input 1"	
		26 (+)	27 (–)
Option **RA**	PROFINET	U_N = 30 V_{DC} U_M = 250 V_{AC}	
Option **RB**	PROFINET with Ethernet-APL	APL port profile SLAX SPE PoDL classes 10, 11, 12 U_N = 30 V_{DC} U_M = 250 V_{AC}	

Order code for "Output; input 2"; "Output; input 3"	Output type	Safety-related values			
		Output; input 2		Output; input 3	
		24 (+)	25 (–)	22 (+)	23 (–)
Option **B**	Current output 4 to 20 mA	U_N = 30 V_{DC} U_M = 250 V_{AC}			
Option **D**	User-configurable input/ output	U_N = 30 V_{DC} U_M = 250 V_{AC}			
Option **E**	Pulse/frequency/switch output	U_N = 30 V_{DC} U_M = 250 V_{AC}			
Option **F**	Double pulse output	U_N = 30 V_{DC} U_M = 250 V_{AC}			
Option **H**	Relay output	U_N = 30 V_{DC} I_N =100 mA_{DC}/500 mA_{AC} U_M = 250 V_{AC}			
Option **I**	Current input 4 to 20 mA	U_N = 30 V_{DC} U_M = 250 V_{AC}			
Option **J**	Status input	U_N = 30 V_{DC} U_M = 250 V_{AC}			

Intrinsically safe values

Order code "Output; input 1"	Output type	Intrinsically safe values "Output; input 1"	
		26 (+)	27 (–)
Option **CA**	Current output 4 to 20 mA HART Ex i passive	U_i = 30 V I_i = 100 mA P_i = 1.25 W L_i = 0 µH C_i = 6 nF	
Option **CC**	Current output 4 to 20 mA HART Ex i active	**Ex ia** [1)] U_0 = 21.8 V I_0 = 90 mA P_0 = 491 mW L_0 = 4.1 mH (IIC)/15 mH (IIB) C_0 = 160 nF (IIC)/ 1 160 nF (IIB) U_i = 30 V I_i = 10 mA P_i = 0.3 W L_i = 5 µH C_i = 6 nF	**Ex ic** [2)] U_0 = 21.8 V I_0 = 90 mA P_0 = 491 mW L_0 = 9 mH (IIC)/39 mH (IIB) C_0 = 600 nF (IIC)/ 4 000 nF (IIB)

Order code "Output; input 1"	Output type	Intrinsically safe values "Output; input 1"	
		26 (+)	27 (–)
Option **HA**	PROFIBUS PA Ex i (FISCO Field Device)	**Ex ia** [1] U_i = 30 V I_i = 570 mA P_i = 8.5 W L_i = 10 µH C_i = 5 nF	**Ex ic** [2] U_i = 32 V I_i = 570 mA P_i = 8.5 W L_i = 10 µH C_i = 5 nF
Option **TA**	FOUNDATION Fieldbus Ex i	**Ex ia** [1] U_i = 30 V I_i = 570 mA P_i = 8.5 W L_i = 10 µH C_i = 5 nF	**Ex ic** [2] U_i = 32 V I_i = 570 mA P_i = 8.5 W L_i = 10 µH C_i = 5 nF
Option **RC**	PROFINET with Ethernet-APL Ex i	**Ex ia** [1] 2-WISE power load APL port profile SLAA	**Ex ic** [2] 2-WISE power load APL port profile SLAC

1) Only available for Proline 500 transmitter Zone 1; Class I, Division 1.
2) Only available for transmitter Zone 2; Class I, Division 2.

Order code for "Output; input 2"; "Output; input 3"	Output type	Intrinsically safe values or NIFW values			
		Output; input 2		Output; input 3	
		24 (+)	25 (–)	22 (+)	23 (–)
Option **C**	Current output 4 to 20 mA Ex i passive	U_i = 30 V I_i = 100 mA P_i = 1.25 W L_i = 0 C_i = 0			
Option **G**	Pulse/frequency/switch output Ex i passive	U_i = 30 V I_i = 100 mA P_i = 1.25 W L_i = 0 C_i = 0			

Low flow cut off

The switch points for low flow cut off are user-selectable.

Galvanic isolation

The outputs are galvanically isolated:
- from the power supply
- from one another
- from the potential equalization (PE) terminal

Protocol-specific data

HART

Manufacturer ID	0x11
Device type ID	0x3B
HART protocol revision	7
Device description files (DTM, DD)	Information and files under: www.endress.com
HART load	Min. 250 Ω
System integration	Information on system integration: Operating Instructions → 🗎 98. ▪ Measured variables via HART protocol ▪ Burst Mode functionality

FOUNDATION Fieldbus

Manufacturer ID	0x452B48 (hex)
Ident number	0x103B (hex)
Device revision	1
DD revision	Information and files under: ▪ www.endress.com ▪ www.fieldcommgroup.org
CFF revision	
Interoperability Test Kit (ITK)	Version 6.2.0
ITK Test Campaign Number	Information: ▪ www.endress.com ▪ www.fieldcommgroup.org
Link Master capability (LAS)	Yes
Choice of "Link Master" and "Basic Device"	Yes Factory setting: Basic Device
Node address	Factory setting: 247 (0xF7)
Supported functions	The following methods are supported: ▪ Restart ▪ ENP Restart ▪ Diagnostic ▪ Set to OOS ▪ Set to AUTO ▪ Read trend data ▪ Read event logbook
Virtual Communication Relationships (VCRs)	
Number of VCRs	44
Number of link objects in VFD	50
Permanent entries	1
Client VCRs	0
Server VCRs	10
Source VCRs	43
Sink VCRs	0
Subscriber VCRs	43
Publisher VCRs	43
Device Link Capabilities	
Slot time	4
Min. delay between PDU	8
Max. response delay	16
System integration	Information regarding system integration: Operating Instructions → 🗎 98. ▪ Cyclic data transmission ▪ Description of the modules ▪ Execution times ▪ Methods

PROFIBUS DP

Manufacturer ID	0x11
Ident number	0x156F
Profile version	3.02

Device description files (GSD, DTM, DD)	Information and files under: ▪ https://www.endress.com/download On the device product page: PRODUCTS → Product Finder → Links ▪ https://www.profibus.com
Supported functions	▪ Identification & Maintenance Simplest device identification on the part of the control system and nameplate ▪ PROFIBUS upload/download Reading and writing parameters is up to ten times faster with PROFIBUS upload/download ▪ Condensed status Simplest and self-explanatory diagnostic information by categorizing diagnostic messages that occur
Configuration of the device address	▪ DIP switches on the I/O electronics module ▪ Via operating tools (e.g. FieldCare)
Compatibility with earlier model	If the device is replaced, the measuring device Promass 300 supports the compatibility of the cyclic data with previous models. It is not necessary to adjust the engineering parameters of the PROFIBUS network with the Promass 300 GSD file. Previous model: Promass 83 PROFIBUS DP ▪ ID No.: 1529 (hex) ▪ Extended GSD file: EH3x1529.gsd ▪ Standard GSD file: EH3_1529.gsd Description of the function scope of compatibility: Operating Instructions → 🗎 98.
System integration	Information regarding system integration: Operating Instructions → 🗎 98. ▪ Cyclic data transmission ▪ Block model ▪ Description of the modules

PROFIBUS PA

Manufacturer ID	0x11
Ident number	0x156D
Profile version	3.02
Device description files (GSD, DTM, DD)	Information and files under: ▪ https://www.endress.com/download On the device product page: PRODUCTS → Product Finder → Links ▪ https://www.profibus.com
Supported functions	▪ Identification & Maintenance Simplest device identification on the part of the control system and nameplate ▪ PROFIBUS upload/download Reading and writing parameters is up to ten times faster with PROFIBUS upload/download ▪ Condensed status Simplest and self-explanatory diagnostic information by categorizing diagnostic messages that occur
Configuration of the device address	▪ DIP switches on the I/O electronics module ▪ Local display ▪ Via operating tools (e.g. FieldCare)

Compatibility with earlier model	If the device is replaced, the measuring device Promass 300 supports the compatibility of the cyclic data with previous models. It is not necessary to adjust the engineering parameters of the PROFIBUS network with the Promass 300 GSD file.
	Earlier models:
	▪ Promass 80 PROFIBUS PA
	  ▪ ID No.: 1528 (hex)
	  ▪ Extended GSD file: EH3x1528.gsd
	  ▪ Standard GSD file: EH3_1528.gsd
	▪ Promass 83 PROFIBUS PA
	  ▪ ID No.: 152A (hex)
	  ▪ Extended GSD file: EH3x152A.gsd
	  ▪ Standard GSD file: EH3_152A.gsd
	Description of the function scope of compatibility: Operating Instructions → 📄 98.

System integration	Information regarding system integration: Operating Instructions → 📄 98. ▪ Cyclic data transmission ▪ Block model ▪ Description of the modules

Modbus RS485

Protocol	Modbus Applications Protocol Specification V1.1
Response times	▪ Direct data access: typically 25 to 50 ms ▪ Auto-scan buffer (data range): typically 3 to 5 ms
Device type	Slave
Slave address range	1 to 247
Broadcast address range	0
Function codes	▪ 03: Read holding register ▪ 04: Read input register ▪ 06: Write single registers ▪ 08: Diagnostics ▪ 16: Write multiple registers ▪ 23: Read/write multiple registers
Broadcast messages	Supported by the following function codes: ▪ 06: Write single registers ▪ 16: Write multiple registers ▪ 23: Read/write multiple registers
Supported baud rate	▪ 1 200 BAUD ▪ 2 400 BAUD ▪ 4 800 BAUD ▪ 9 600 BAUD ▪ 19 200 BAUD ▪ 38 400 BAUD ▪ 57 600 BAUD ▪ 115 200 BAUD
Data transfer mode	▪ ASCII ▪ RTU
Data access	Each device parameter can be accessed via Modbus RS485. For Modbus register information

Compatibility with earlier model	If the device is replaced, the measuring device Promass 300 supports the compatibility of the Modbus registers for the process variables and the diagnostic information with the previous model Promass 83. It is not necessary to change the engineering parameters in the automation system. Description of the function scope of compatibility: Operating Instructions → 🗎 98.
System integration	Information on system integration: Operating Instructions → 🗎 98. ▪ Modbus RS485 information ▪ Function codes ▪ Register information ▪ Response time ▪ Modbus data map

EtherNet/IP

Protocol	▪ The CIP Networks Library Volume 1: Common Industrial Protocol ▪ The CIP Networks Library Volume 2: EtherNet/IP Adaptation of CIP
Communication type	▪ 10Base-T ▪ 100Base-TX
Device profile	Generic device (product type: 0x2B)
Manufacturer ID	0x000049E
Device type ID	0x103B
Baud rates	Automatic $^{10}/_{100}$ Mbit with half-duplex and full-duplex detection
Polarity	Auto-polarity for automatic correction of crossed TxD and RxD pairs
Supported CIP connections	Max. 3 connections
Explicit connections	Max. 6 connections
I/O connections	Max. 6 connections (scanner)
Configuration options for measuring device	▪ DIP switches on the electronics module for IP addressing ▪ Manufacturer-specific software (FieldCare) ▪ Add-on Profile Level 3 for Rockwell Automation control systems ▪ Web browser ▪ Electronic Data Sheet (EDS) integrated in the measuring device
Configuration of the EtherNet interface	▪ Speed: 10 MBit, 100 MBit, auto (factory setting) ▪ Duplex: half-duplex, full-duplex, auto (factory setting)
Configuration of the device address	▪ DIP switches on the electronics module for IP addressing (last octet) ▪ DHCP ▪ Manufacturer-specific software (FieldCare) ▪ Add-on Profile Level 3 for Rockwell Automation control systems ▪ Web browser ▪ EtherNet/IP tools, e.g. RSLinx (Rockwell Automation)
Device Level Ring (DLR)	Yes
System integration	Information regarding system integration: Operating Instructions → 🗎 98. ▪ Cyclic data transmission ▪ Block model ▪ Input and output groups

PROFINET

Protocol	Application layer protocol for decentral device periphery and distributed automation, Version 2.3
Communication type	100 MBit/s
Conformance Class	Conformance Class B
Netload Class	Netload Class 2 0 Mbps

Baud rates	Automatic 100 Mbit/s with full-duplex detection
Cycle times	From 8 ms
Polarity	Auto-polarity for automatic correction of crossed TxD and RxD pairs
Media Redundancy Protocol (MRP)	Yes
System redundancy support	System redundancy S2 (2 AR with 1 NAP)
Device profile	Application interface identifier 0xF600 Generic device
Manufacturer ID	0x11
Device type ID	0x843B
Device description files (GSD, DTM, DD)	Information and files under: ▪ www.endress.com On the product page for the device: Documents/Software → Device drivers ▪ www.profibus.com
Supported connections	▪ 2 x AR (IO Controller AR) ▪ 1 x AR (IO-Supervisor Device AR connection allowed) ▪ 1 x Input CR (Communication Relation) ▪ 1 x Output CR (Communication Relation) ▪ 1 x Alarm CR (Communication Relation)
Configuration options for measuring device	▪ DIP switches on the electronics module, for device name assignment (last part) ▪ Asset management software (FieldCare, DeviceCare, Field Xpert) ▪ Integrated Web server via Web browser and IP address ▪ Device master file (GSD), can be read out via the integrated Web server of the measuring device. ▪ Onsite operation
Configuration of the device name	▪ DIP switches on the electronics module, for device name assignment (last part) ▪ DCP protocol ▪ Asset management software (FieldCare, DeviceCare, Field Xpert) ▪ Integrated Web server

Supported functions	▪ Identification & Maintenance, simple device identifier via:
	  ▪ Control system
	  ▪ Nameplate
	▪ Measured value status
	The process variables are communicated with a measured value status
	▪ Blinking feature via the local display for simple device identification and assignment
	▪ Device operation via asset management software (e.g. FieldCare, DeviceCare, SIMATIC PDM)

System integration	Information regarding system integration: Operating Instructions → 🗎 98. ▪ Cyclic data transmission ▪ Overview and description of the modules ▪ Status coding ▪ Startup configuration ▪ Factory setting

PROFINET with Ethernet-APL

Protocol	Application layer protocol for decentral device periphery and distributed automation, Version 2.4
Communication type	Ethernet Advanced Physical Layer 10BASE-T1L
Conformance Class	Conformance Class B (PA)
Netload Class	Netload Class 2 0 Mbps
Baud rates	10 Mbit/s Full-duplex
Cycle times	64 ms

Polarity	Automatic correction of crossed "APL signal +" and "APL signal -" signal lines
Media Redundancy Protocol (MRP)	Not possible (point-to-point connection to APL field switch)
System redundancy support	System redundancy S2 (2 AR with 1 NAP)
Device profile	PROFINET PA profile 4 (Application interface identifier API: 0x9700)
Manufacturer ID	0x11
Device type ID	0xA43B
Device description files (GSD, DTM, FDI)	Information and files under: ▪ www.endress.com/download On the device product page: PRODUCTS → Product Finder → Links ▪ www.profibus.com
Supported connections	▪ 2x AR (IO Controller AR) ▪ 2x AR (IO Supervisor Device AR connection allowed)
Configuration options for measuring device	▪ DIP switches on the electronics module, for device name assignment (last part) ▪ Asset management software (FieldCare, DeviceCare, Field Xpert) ▪ Integrated Web server via Web browser and IP address ▪ Device master file (GSD), can be read out via the integrated Web server of the measuring device. ▪ Onsite operation
Configuration of the device name	▪ DIP switches on the electronics module, for device name assignment (last part) ▪ DCP protocol ▪ Asset management software (FieldCare, DeviceCare, Field Xpert) ▪ Integrated Web server

Supported functions	▪ Identification & Maintenance, simple device identifier via:
	  ▪ Control system
	  ▪ Nameplate
	▪ Measured value status
	The process variables are communicated with a measured value status
	▪ Blinking feature via the local display for simple device identification and assignment
	▪ Device operation via asset management software (e.g. FieldCare, DeviceCare, SIMATIC PDM with FDI package)

System integration	Information regarding system integration: Operating Instructions → 🗎 98. ▪ Cyclic data transmission ▪ Overview and description of the modules ▪ Status coding ▪ Startup configuration ▪ Factory setting

Power supply

Terminal assignment

Transmitter: supply voltage, input/outputs

HART

Supply voltage		Input/output 1		Input/output 2		Input/output 3	
1 (+)	2 (–)	26 (+)	27 (–)	24 (+)	25 (–)	22 (+)	23 (–)
		The terminal assignment depends on the specific device version ordered → 🗎 13.					

FOUNDATION Fieldbus

Supply voltage		Input/output 1		Input/output 2		Input/output 3	
1 (+)	2 (–)	26 (A)	27 (B)	24 (+)	25 (–)	22 (+)	23 (–)
		The terminal assignment depends on the specific device version ordered → 🗎 13.					

PROFIBUS DP

Supply voltage		Input/output 1		Input/output 2		Input/output 3	
1 (+)	2 (–)	26 (B)	27 (A)	24 (+)	25 (–)	22 (+)	23 (–)
		The terminal assignment depends on the specific device version ordered → 🗎 13.					

PROFIBUS PA

Supply voltage		Input/output 1		Input/output 2		Input/output 3	
1 (+)	2 (–)	26 (B)	27 (A)	24 (+)	25 (–)	22 (+)	23 (–)
		The terminal assignment depends on the specific device version ordered → 🗎 13.					

Modbus RS485

Supply voltage		Input/output 1		Input/output 2		Input/output 3	
1 (+)	2 (–)	26 (B)	27 (A)	24 (+)	25 (–)	22 (+)	23 (–)
		The terminal assignment depends on the specific device version ordered → 🗎 13.					

PROFINET

Supply voltage		Input/output 1	Input/output 2		Input/output 3	
1 (+)	2 (–)	PROFINET (RJ45 connector)	24 (+)	25 (–)	22 (+)	23 (–)
			The terminal assignment depends on the specific device version ordered → 🗎 13.			

PROFINET with Ethernet-APL

Supply voltage		Input/output 1	Input/output 2		Input/output 3	
1 (+)	2 (–)	PROFINET (RJ45 connector)	24 (+)	25 (–)	22 (+)	23 (–)
			The terminal assignment depends on the specific device version ordered → 🗎 13.			

EtherNet/IP

Supply voltage		Input/output 1	Input/output 2		Input/output 3	
1 (+)	2 (–)	EtherNet/IP (RJ45 connector)	24 (+)	25 (–)	22 (+)	23 (–)
			The terminal assignment depends on the specific device version ordered → 🗎 13.			

Terminal assignment of the remote display and operating module → 🗎 36.

Available device plugs

Device plugs may not be used in hazardous areas!

Device plugs for fieldbus systems:
Order code for "Input; output 1"
- Option **SA** "FOUNDATION Fieldbus" → 🗎 33
- Option **GA** "PROFIBUS PA" → 🗎 33
- Option **NA** "EtherNet/IP" → 🗎 33
- Option **RA** "PROFINET" → 🗎 34
- Option **RB** "PROFINET with Ethernet-APL" → 🗎 34

Device plug for connecting to the service interface:
Order code for "Accessory mounted"
Option **NB**, adapter RJ45 M12 (service interface) → 🗎 47

Order code for "Input; output 1", option SA "FOUNDATION Fieldbus"

Order code for "Electrical connection"	Cable entry/connection → 🗎 35	
	2	3
M, 3, 4, 5	7/8" connector	–

Order code for "Input; output 1", option GA "PROFIBUS PA"

Order code for "Electrical connection"	Cable entry/connection → 🗎 35	
	2	3
L, N, P, U	Connector M12 × 1	–

Order code for "Input; output 1", option NA "EtherNet/IP"

Order code for "Electrical connection"	Cable entry/connection → 🗎 35	
	2	3
L, N, P, U	Connector M12 × 1	–
R [1) 2)], S [1) 2)], T [1) 2)], V [1) 2)]	Connector M12 × 1	Connector M12 × 1

1) Cannot be combined with an external WLAN antenna (order code for "Enclosed accessories", option P8) of an RJ45 M12 adapter for the service interface (order code for "Accessories mounted", option NB) or of the remote display and operating module DKX001
2) Suitable for integrating the device in a ring topology.

Order code for "Input; output 1", option RA "PROFINET"

Order code for "Electrical connection"	Cable entry/connection → 🗎 35	
	2	3
L, N, P, U	Connector M12 × 1	–
R [1) 2)], S [1) 2)], T [1) 2)], V [1) 2)]	Connector M12 × 1	Connector M12 × 1

1) Cannot be combined with an external WLAN antenna (order code for "Enclosed accessories", option P8) of an RJ45 M12 adapter for the service interface (order code for "Accessories mounted", option NB) or of the remote display and operating module DKX001.
2) Suitable for integrating the device in a ring topology.

Order code for "Input; output 1", option RB "PROFINET with Ethernet-APL"

Order code "Electrical connection"	Cable entry/connection → 🗎 35	
	2	3
L, N, P, U	M12 plug × 1	–

Order code for "Accessory mounted", option NB "Adapter RJ45 M12 (service interface)"

Order code "Accessory mounted"	Cable entry/coupling → 🗎 35	
	Cable entry 2	Cable entry 3
NB	Plug M12 × 1	–

Supply voltage

Order code for "Power supply"	Terminal voltage		Frequency range
Option **D**	DC 24 V	±20%	–
Option **E**	AC 100 to 240 V	−15 to +10%	50/60 Hz
Option **I**	DC 24 V	±20%	–
	AC 100 to 240 V	−15 to +10%	50/60 Hz

Power consumption

Transmitter

Max. 10 W (active power)

switch-on current	Max. 36 A (<5 ms) as per NAMUR Recommendation NE 21

Current consumption

Transmitter

- Max. 400 mA (24 V)
- Max. 200 mA (110 V, 50/60 Hz; 230 V, 50/60 Hz)

Power supply failure

- Totalizers stop at the last value measured.
- Depending on the device version, the configuration is retained in the device memoryor in the pluggable data memory (HistoROM DAT).
- Error messages (incl. total operated hours) are stored.

Overcurrent protection element

The device must be operated with a dedicated circuit breaker, as it does not have an ON/OFF switch of its own.
- The circuit breaker must be easy to reach and labeled accordingly.
- Permitted nominal current of the circuit breaker: 2 A up to maximum 10 A.

Electrical connection

Transmitter connection

- Terminal assignment→ 32
- Device plugs available→ 33

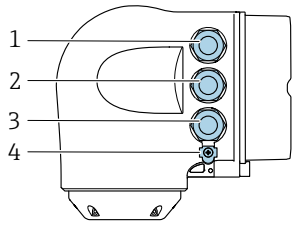

A0026781

1 *Terminal connection for supply voltage*
2 *Terminal connection for signal transmission, input/output*
3 *Terminal connection for signal transmission, input/output or terminal for network connection via service interface (CDI-RJ45); Optional: terminal connection for external WLAN antenna or connection for remote display and operating module DKX001*
4 *Terminal connection for potential equalization (PE)*

An adapter for the RJ45 to the M12 plug is optionally available:
Order code for "Accessories", option **NB**: "Adapter RJ45 M12 (service interface)"

The adapter connects the service interface (CDI-RJ45) to an M12 plug mounted in the cable entry. The connection to the service interface can therefore be established via an M12 plug without opening the device.

Network connection via service interface (CDI-RJ45) → 85

Connecting in a ring topology

Device versions with EtherNet/IP and PROFINET communication protocols can be integrated into a ring topology. The device is integrated via the terminal connection for signal transmission (output 1) and the connection to the service interface (CDI-RJ45).

Integrate the transmitter into a ring topology:
- EtherNet/IP
- PROFINET

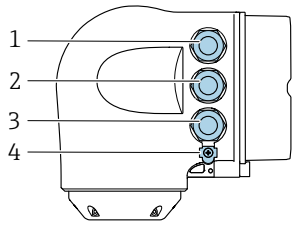

A0026781

1 *Terminal connection for supply voltage*
2 *Terminal connection for signal transmission: PROFINET or EtherNet/IP (RJ45 connector)*
3 *Terminal connection to service interface (CDI-RJ45)*
4 *Terminal connection for potential equalization (PE)*

If the device has additional inputs/outputs, these are routed in parallel via the cable entry for connection to the service interface (CDI-RJ45).

Connecting the remote display and operating module DKX001

The remote display and operating module DKX001 is available as an optional extra → 95.

- The measuring device is always supplied with a dummy cover when the remote display and operating module DKX001 is ordered directly with the measuring device. Display or operation at the transmitter is not possible in this case.
- If ordered subsequently, the remote display and operating module DKX001 may not be connected at the same time as the existing measuring device display module. Only one display or operation unit may be connected to the transmitter at any one time.

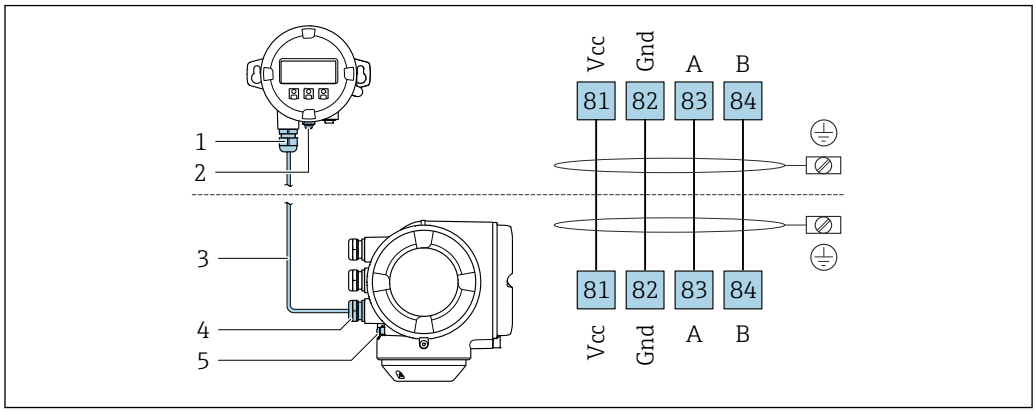

A0027518

1 *Remote display and operating module DKX001*
2 *Terminal connection for potential equalization (PE)*
3 *Connecting cable*
4 *Measuring device*
5 *Terminal connection for potential equalization (PE)*

Connection examples

Current output 4 to 20 mA HART

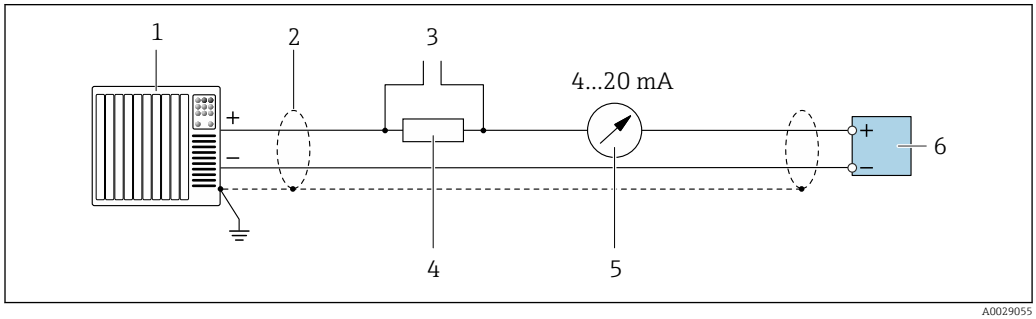

A0029055

2 *Connection example for 4 to 20 mA HART current output (active)*

1 *Automation system with current input (e.g. PLC)*
2 *Cable shield provided at one end. The cable shield must be grounded at both ends to comply with EMC requirements; observe cable specifications → 47*
3 *Connection for HART operating devices → 79*
4 *Resistor for HART communication (≥ 250 Ω): observe maximum load → 15*
5 *Analog display unit: observe maximum load → 15*
6 *Transmitter*

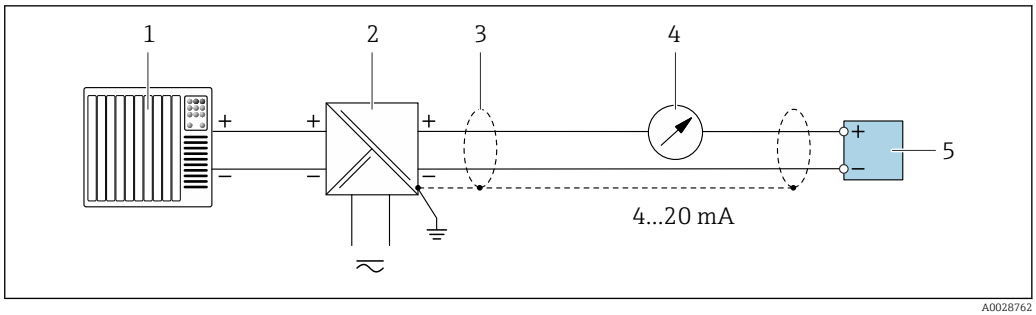

3 Connection example for 4 to 20 mA HART current output (passive)

1 *Automation system with current input (e.g. PLC)*
2 *Power supply*
3 *Cable shield provided at one end. The cable shield must be grounded at both ends to comply with EMC requirements; observe cable specifications → 47*
4 *Analog display unit: observe maximum load → 15*
5 *Transmitter*

HART input

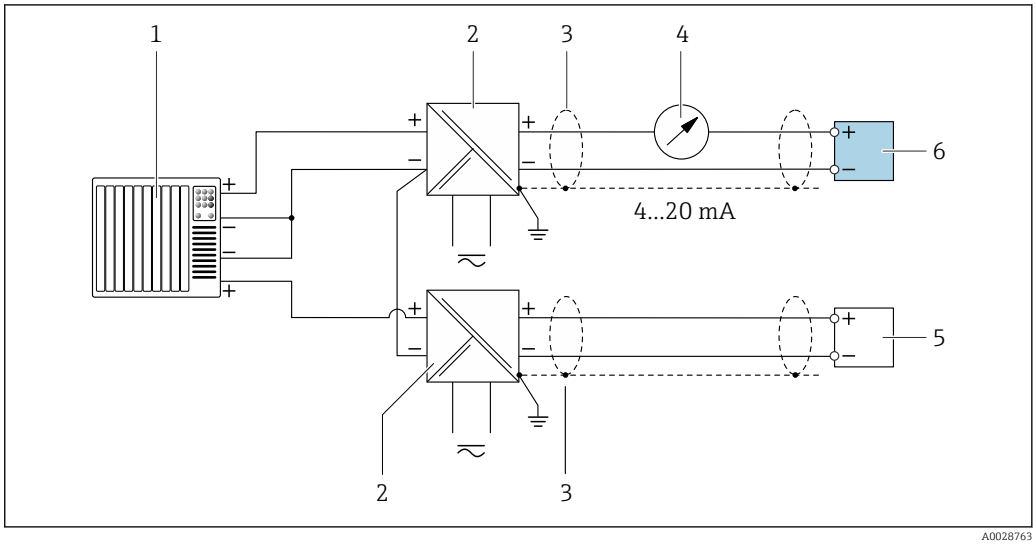

4 Connection example for HART input with a common negative (passive)

1 *Automation system with HART output (e.g. PLC)*
2 *Active barrier for power supply (e.g. RN221N)*
3 *Cable shield provided at one end. The cable shield must be grounded at both ends to comply with EMC requirements; observe cable specifications*
4 *Analog display unit: observe maximum load → 15*
5 *Pressure transmitter (e.g. Cerabar M, Cerabar S): see requirements*
6 *Transmitter*

PROFIBUS PA

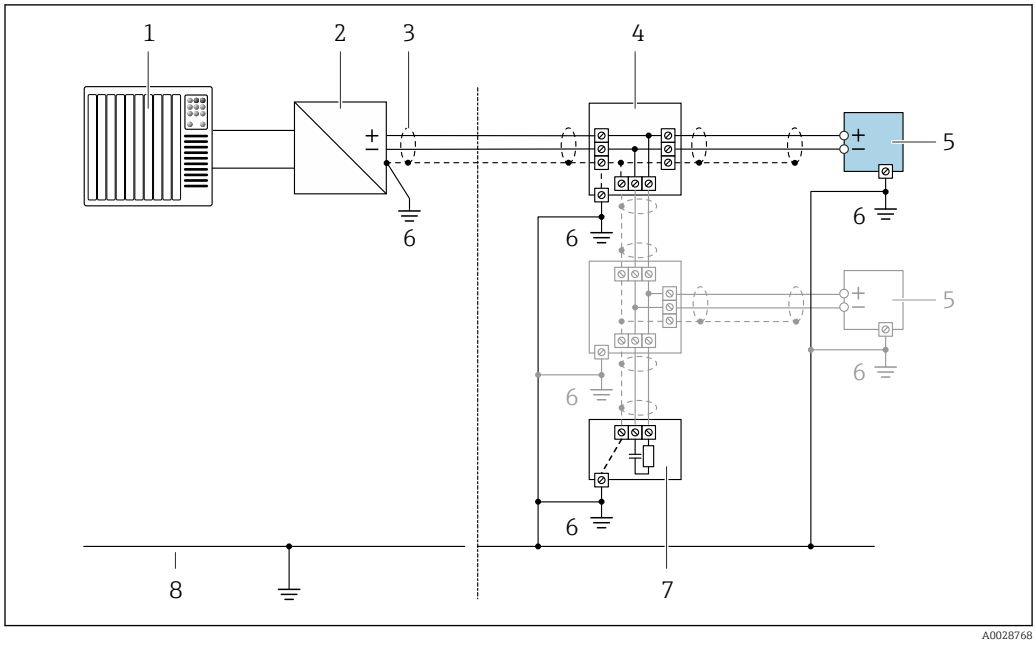

5 Connection example for PROFIBUS PA

1 *Control system (e.g. PLC)*
2 *PROFIBUS PA segment coupler*
3 *Cable shield provided at one end. The cable shield must be grounded at both ends to comply with EMC requirements; observe cable specifications*
4 *T-box*
5 *Measuring device*
6 *Local grounding*
7 *Bus terminator*
8 *Potential matching line*

PROFIBUS DP

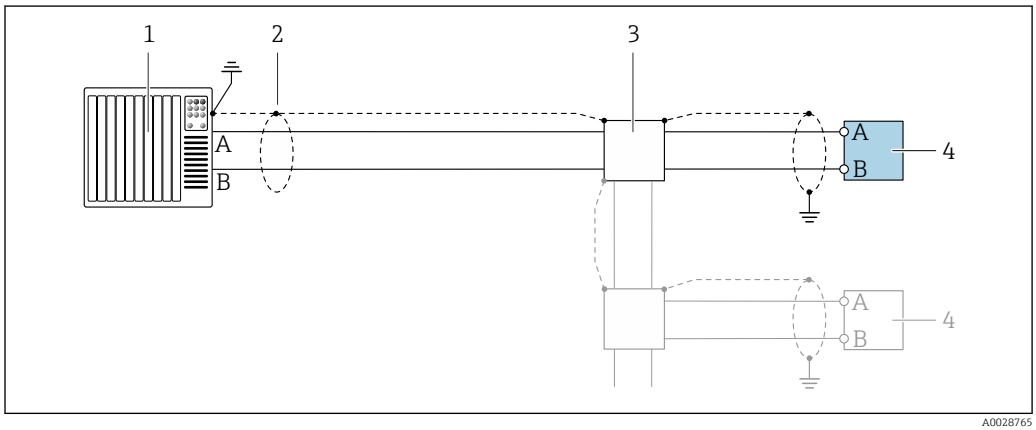

6 Connection example for PROFIBUS DP, non-hazardous area and Zone 2/Div. 2

1 *Control system (e.g. PLC)*
2 *Cable shield provided at one end. The cable shield must be grounded at both ends to comply with EMC requirements; observe cable specifications*
3 *Distribution box*
4 *Transmitter*

If baud rates > 1.5 MBaud an EMC cable entry must be used and the cable shield must continue as far as the terminal wherever possible.

EtherNet/IP

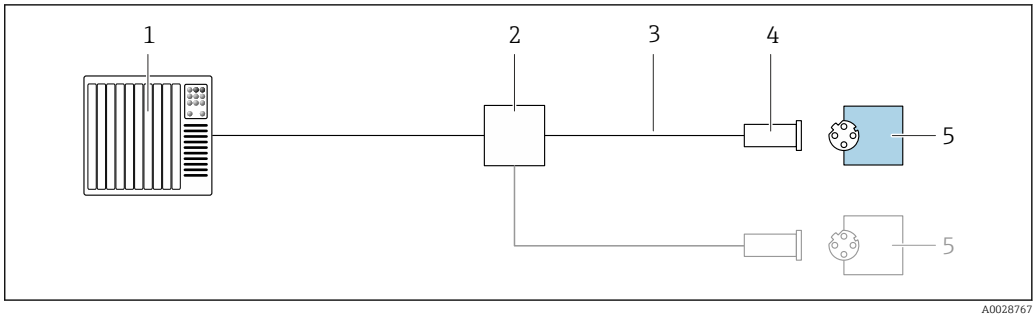

7 Connection example for EtherNet/IP

1 *Control system (e.g. PLC)*
2 *Ethernet switch*
3 *Observe cable specifications*
4 *Device plug*
5 *Transmitter*

EtherNet/IP: DLR (Device Level Ring)

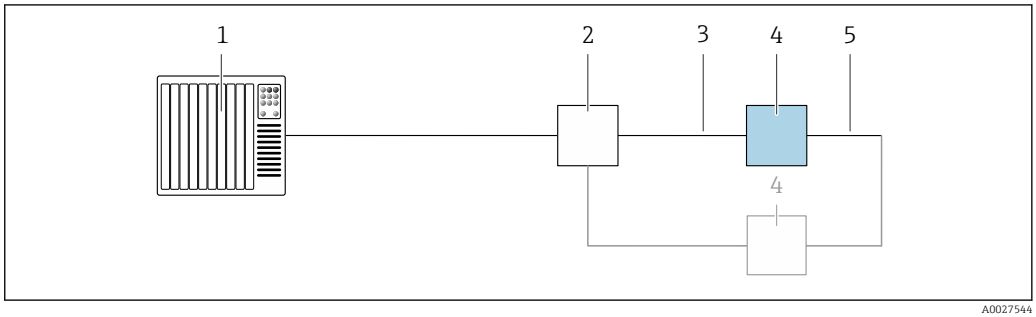

1 *Control system (e.g. PLC)*
2 *Ethernet switch*
3 *Observe cable specifications* → 📄 *47*
4 *Transmitter*
5 *Connecting cable between the two transmitters*

PROFINET

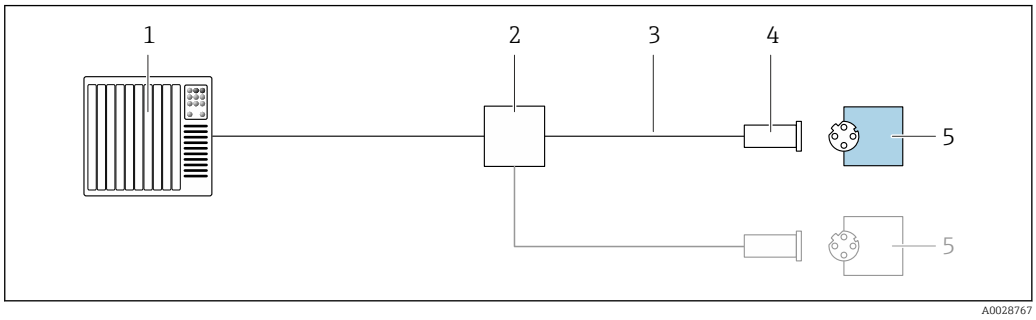

8 Connection example for PROFINET

1 *Control system (e.g. PLC)*
2 *Ethernet switch*
3 *Observe cable specifications*
4 *Device plug*
5 *Transmitter*

PROFINET with Ethernet-APL

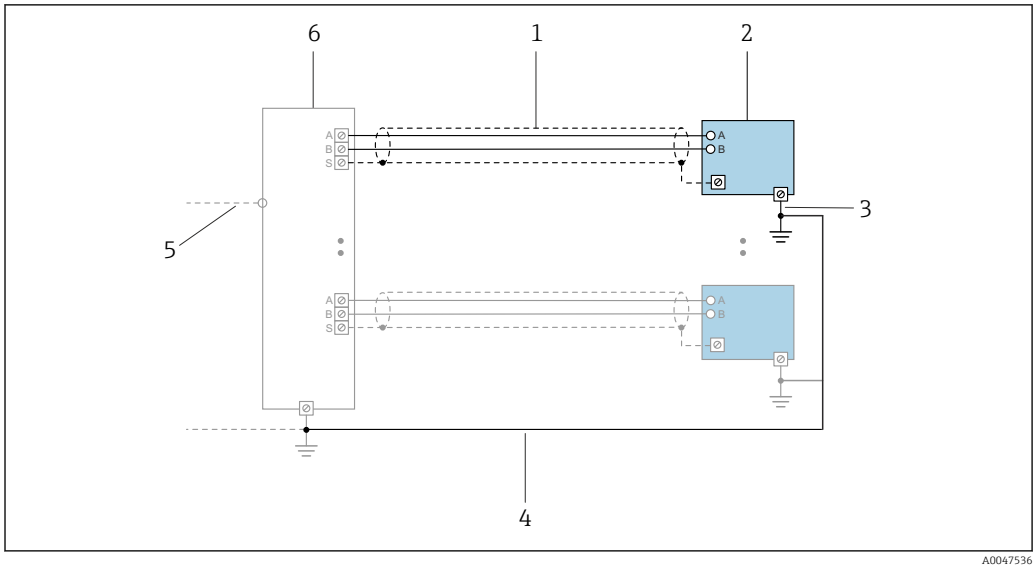

9 Connection example for PROFINET with Ethernet-APL

1 *Cable shield*
2 *Measuring device*
3 *Local grounding*
4 *Potential equalization*
5 *Trunk or TCP*
6 *Field switch*

PROFINET: MRP (Media Redundancy Protocol)

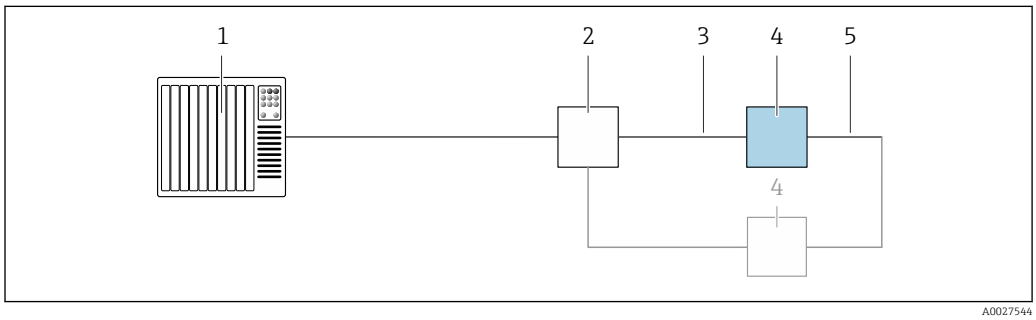

1 *Control system (e.g. PLC)*
2 *Ethernet switch*
3 *Observe cable specifications* → 47
4 *Transmitter*
5 *Connecting cable between the two transmitters*

PROFINET: system redundancy S2

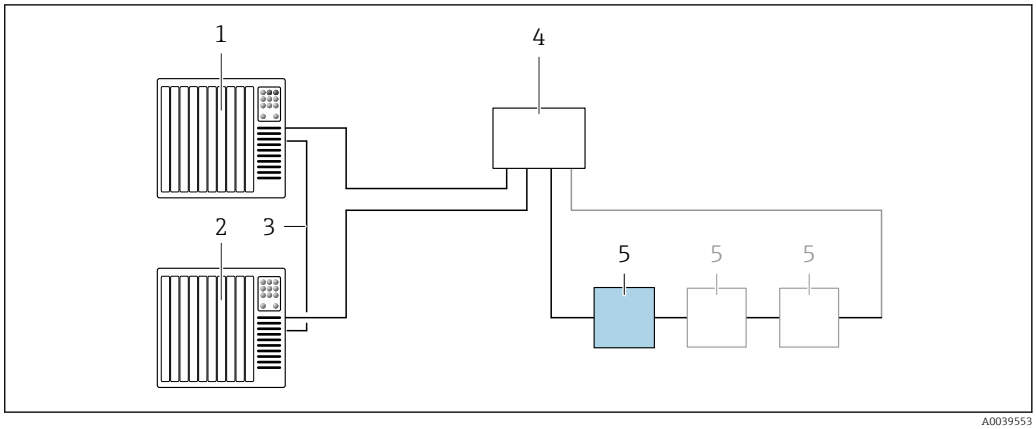

10 Connection example for system redundancy S2

1 *Control system 1 (e.g. PLC)*
2 *Synchronization of control systems*
3 *Control system 2 (e.g. PLC)*
4 *Industrial Ethernet Managed Switch*
5 *Transmitter*

FOUNDATION Fieldbus

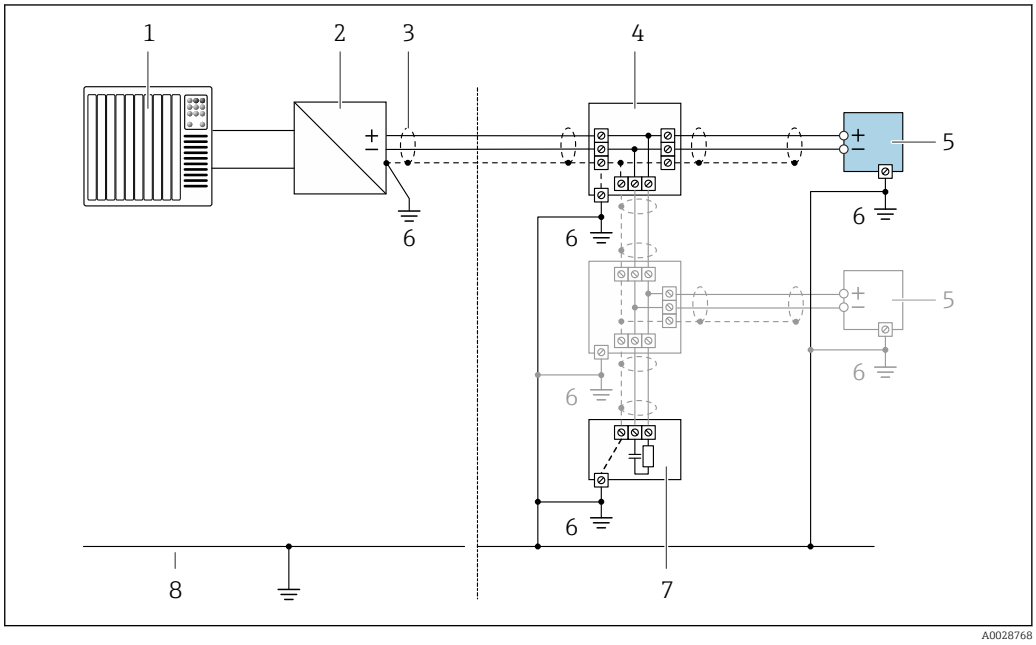

11 Connection example for FOUNDATION Fieldbus

1 *Control system (e.g. PLC)*
2 *Power Conditioner (FOUNDATION Fieldbus)*
3 *Cable shield provided at one end. The cable shield must be grounded at both ends to comply with EMC requirements; observe cable specifications*
4 *T-box*
5 *Measuring device*
6 *Local grounding*
7 *Bus terminator*
8 *Potential matching line*

Modbus RS485

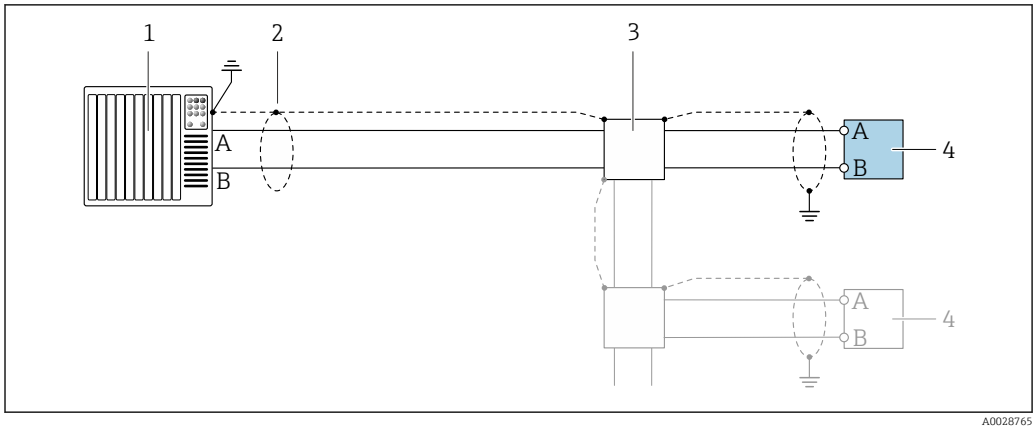

12 Connection example for Modbus RS485, non-hazardous area and Zone 2; Class I, Division 2

1 *Control system (e.g. PLC)*
2 *Cable shield provided at one end. The cable shield must be grounded at both ends to comply with EMC requirements; observe cable specifications*
3 *Distribution box*
4 *Transmitter*

Current output 4-20 mA

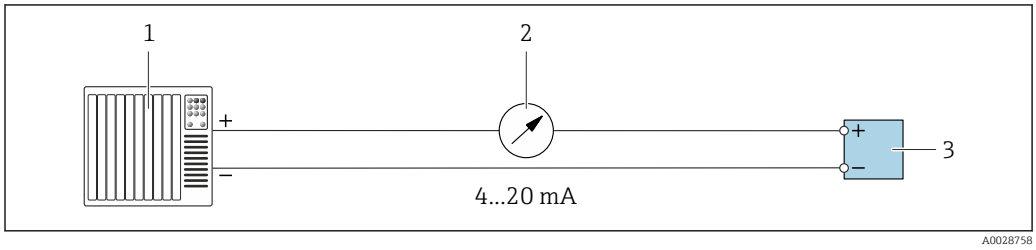

13 Connection example for 4-20 mA current output (active)

1 *Automation system with current input (e.g. PLC)*
2 *Analog display unit: observe maximum load → 📄 15*
3 *Transmitter*

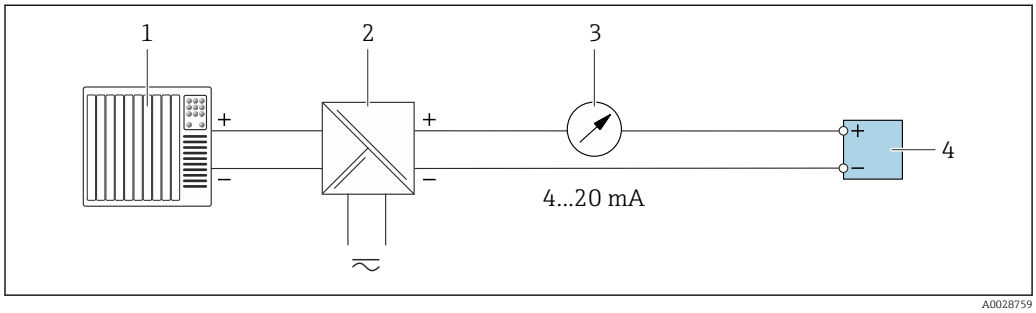

14 Connection example for 4-20 mA current output (passive)

1 *Automation system with current input (e.g. PLC)*
2 *Active barrier for power supply (e.g. RN221N)*
3 *Analog display unit: observe maximum load → 📄 15*
4 *Transmitter*

Pulse/frequency output

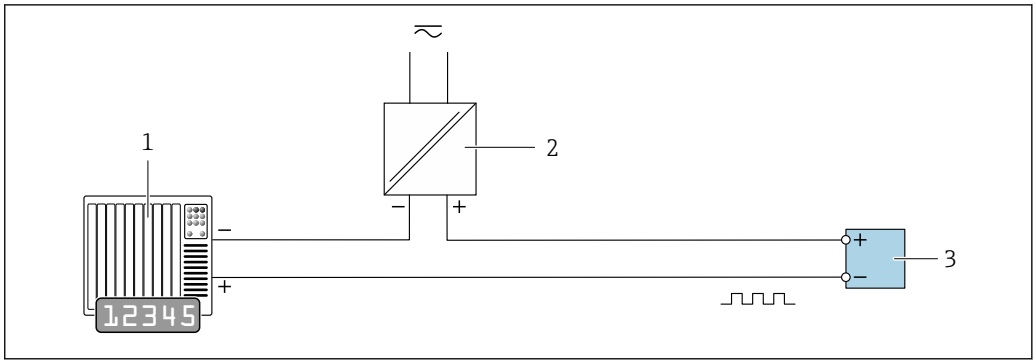

15 Connection example for pulse/frequency output (passive)

1 *Automation system with pulse/frequency input (e.g. PLC with 10 kΩ pull-up or pull-down resistor)*
2 *Power supply*
3 *Transmitter: observe input values → 18*

Switch output

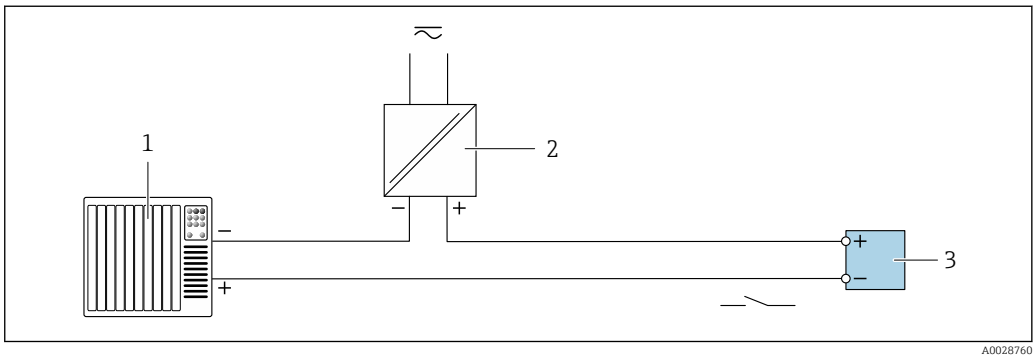

16 Connection example for switch output (passive)

1 *Automation system with switch input (e.g. PLC with a 10 kΩ pull-up or pull-down resistor)*
2 *Power supply*
3 *Transmitter: observe input values → 18*

Double pulse output

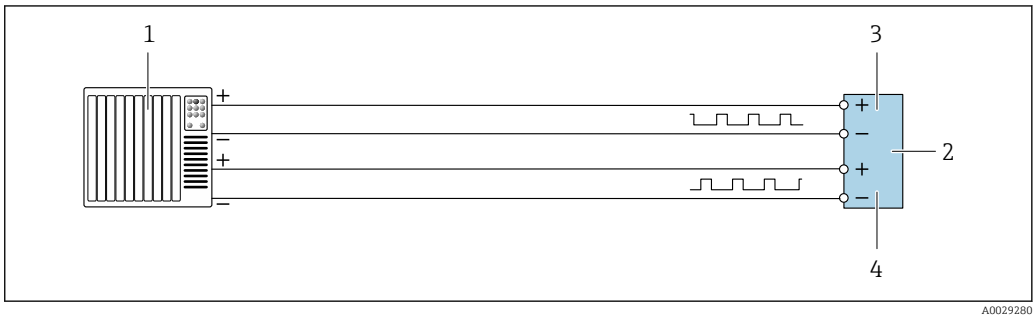

17 Connection example for double pulse output (active)

1 *Automation system with double pulse input (e.g. PLC)*
2 *Transmitter: observe input values → 20*
3 *Double pulse output*
4 *Double pulse output (slave), phase-shifted*

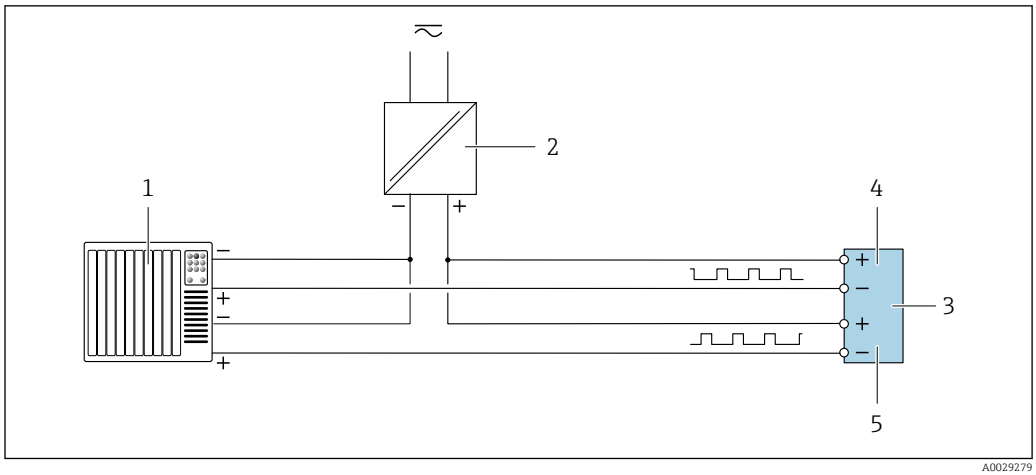

18 *Connection example for double pulse output (passive)*

1 *Automation system with double pulse input (e.g. PLC with a 10 kΩ pull-up or pull-down resistor)*
2 *Power supply*
3 *Transmitter: observe input values → 20*
4 *Double pulse output*
5 *Double pulse output (slave), phase-shifted*

Relay output

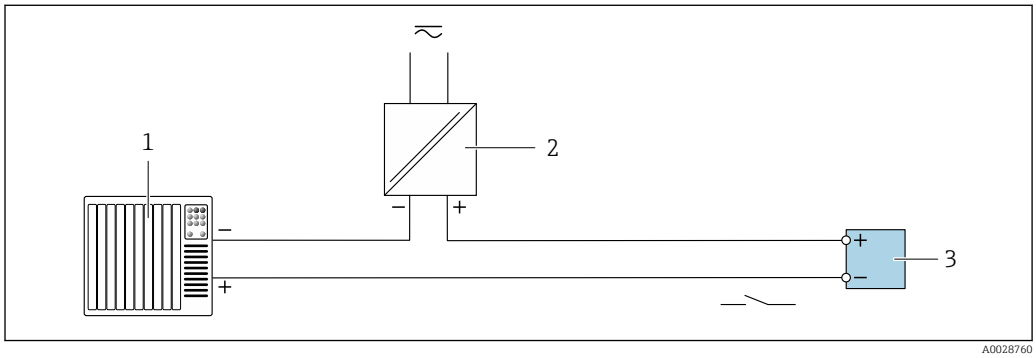

19 *Connection example for relay output (passive)*

1 *Automation system with relay input (e.g. PLC)*
2 *Power supply*
3 *Transmitter: observe input values → 20*

Current input

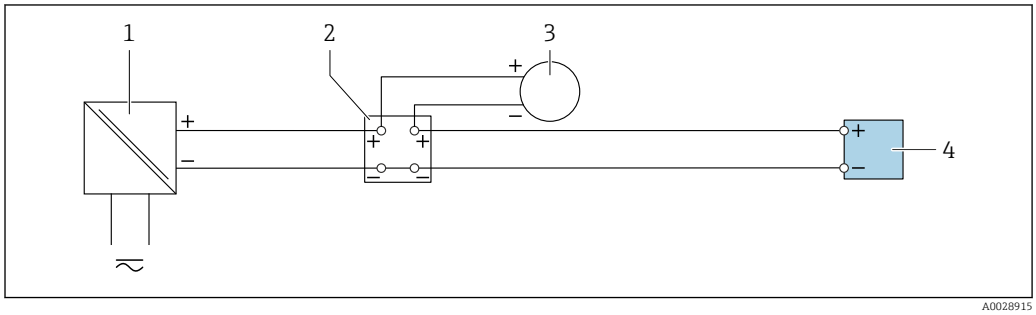

20 *Connection example for 4 to 20 mA current input*

1 *Power supply*
2 *Terminal box*
3 *External measuring device (to read in pressure or temperature, for instance)*
4 *Transmitter*

Status input

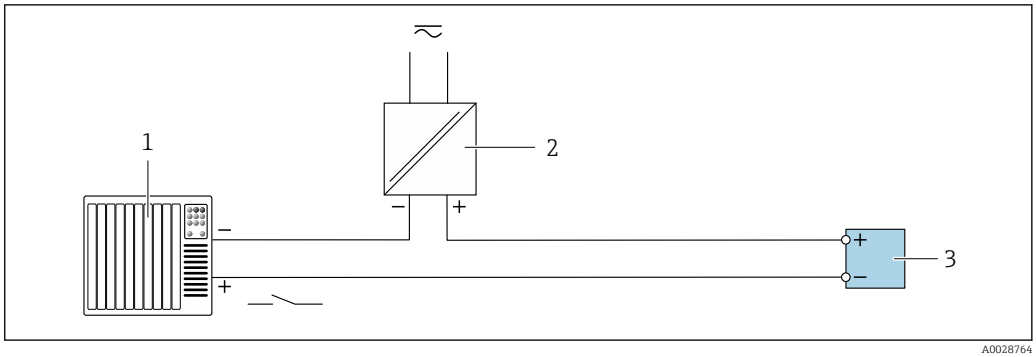

21 Connection example for status input

1 Automation system with status output (e.g. PLC)
2 Power supply
3 Transmitter

Potential equalization

Requirements

For potential equalization:
- Pay attention to in-house grounding concepts
- Take account of operating conditions like the pipe material and grounding
- Connect the medium, sensor and transmitter to the same electrical potential
- Use a ground cable with a minimum cross-section of 6 mm² (0.0093 in²) and a cable lug for potential equalization connections

For devices intended for use in hazardous locations, please observe the guidelines in the Ex documentation (XA).

Terminals

Spring-loaded terminals: Suitable for strands and strands with ferrules.
Conductor cross-section 0.2 to 2.5 mm² (24 to 12 AWG).

Cable entries

- Cable gland: M20 × 1.5 with cable ⌀ 6 to 12 mm (0.24 to 0.47 in)
- Thread for cable entry:
  - NPT ½"
  - G ½"
  - M20
- Device plug for digital communication: M12
  Only available for certain device versions → 33.

Pin assignment, device plug

FOUNDATION Fieldbus

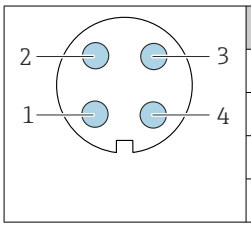

Pin		Assignment	Coding	Plug/socket
1	+	Signal +	A	Plug
2	-	Signal –		
3		Grounding		
4		Not assigned		

PROFIBUS PA

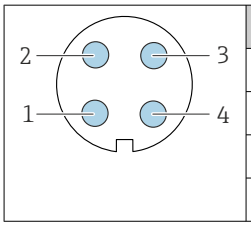

Pin		Assignment	Coding	Plug/socket
1	+	PROFIBUS PA +	A	Plug
2		Grounding		
3	-	PROFIBUS PA –		
4		Not assigned		

Recommended plug:
- Binder, series 713, part no. 99 1430 814 04
- Phoenix, part no. 1413934 SACC-FS-4QO SH PBPA SCO

PROFINET

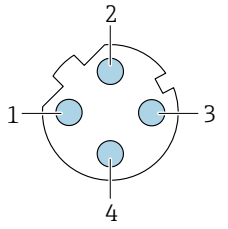

Pin		Assignment
1	+	TD +
2	+	RD +
3	-	TD –
4	-	RD –
Coding		**Plug/socket**
D		Socket

Recommended plug:
- Binder, series 825, part no. 99 3729 810 04
- Phoenix, part no. 1543223 SACC-M12MSD-4Q

PROFINET with Ethernet-APL

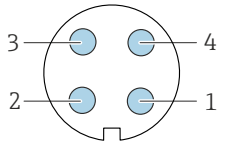

Pin		Assignment	Coding	Plug/socket
1	-	APL signal -	A	Socket
2	+	APL signal +		
3		Cable shield[1]		
4		Not assigned		
Metal plug housing		Cable shield		
[1]If a cable shield is used				

Recommended plug:
- Binder, series 713, part no. 99 1430 814 04
- Phoenix, part no. 1413934 SACC-FS-4QO SH PBPA SCO

EtherNet/IP

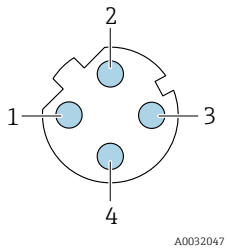

Pin		Assignment
1	+	Tx
2	+	Rx
3	-	Tx
4	-	Rx
Coding		**Plug/socket**
D		Socket

Recommended plug:
- Binder, series 763, part no. 99 3729 810 04
- Phoenix, part no. 1543223 SACC-M12MSD-4Q

Service interface

Order code for "Accessories mounted", option **NB**: Adapter RJ45 M12 (service interface)

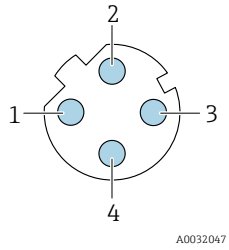

Pin		Assignment
1	+	Tx
2	+	Rx
3	-	Tx
4	-	Rx
Coding		**Plug/socket**
D		Socket

Recommended plug:
- Binder, series 763, part no. 99 3729 810 04
- Phoenix, part no. 1543223 SACC-M12MSD-4Q

Cable specification

Permitted temperature range

- The installation guidelines that apply in the country of installation must be observed.
- The cables must be suitable for the minimum and maximum temperatures to be expected.

Power supply cable (incl. conductor for the inner ground terminal)

Standard installation cable is sufficient.

Protective grounding cable for the outer ground terminal

Conductor cross-section < 2.1 mm^2 (14 AWG)

The use of a cable lug enables the connection of larger cross-sections.

The grounding impedance must be less than 2 Ω.

Signal cable

Current output 4 to 20 mA HART

A shielded cable is recommended. Observe grounding concept of the plant.

PROFIBUS PA

Twisted, shielded two-wire cable. Cable type A is recommended .

For further information on planning and installing PROFIBUS networks see:
- Operating Instructions "PROFIBUS DP/PA: Guidelines for planning and commissioning" (BA00034S)
- PNO Directive 2.092 "PROFIBUS PA User and Installation Guideline"
- IEC 61158-2 (MBP)

PROFIBUS DP

The IEC 61158 standard specifies two types of cable (A and B) for the bus line which can be used for every transmission rate. Cable type A is recommended.

Cable type	A
Characteristic impedance	135 to 165 Ω at a measuring frequency of 3 to 20 MHz
Cable capacitance	< 30 pF/m
Wire cross-section	> 0.34 mm^2 (22 AWG)
Cable type	Twisted pairs
Loop resistance	≤110 Ω/km

Signal damping	Max. 9 dB over the entire length of the cable cross-section
Shield	Copper braided shielding or braided shielding with foil shield. When grounding the cable shield, observe the grounding concept of the plant.

For further information on planning and installing PROFIBUS networks see:
- Operating Instructions "PROFIBUS DP/PA: Guidelines for planning and commissioning" (BA00034S)
- PNO Directive 2.092 "PROFIBUS PA User and Installation Guideline"
- IEC 61158-2 (MBP)

EtherNet/IP

The standard ANSI/TIA/EIA-568-B.2 Annex specifies CAT 5 as the minimum category for a cable used for EtherNet/IP. CAT 5e and CAT 6 are recommended.

For more information on planning and installing EtherNet/IP networks, please refer to the "Media Planning and Installation Manual. EtherNet/IP" of ODVA Organization

PROFINET

Standard IEC 61156-6 specifies CAT 5 as the minimum category for a cable used for PROFINET. CAT 5e and CAT 6 are recommended.

For more information on planning and installing PROFINET networks, see: "PROFINET Cabling and Interconnection Technology", Guideline for PROFINET

PROFINET with Ethernet-APL

The reference cable type for APL segments is fieldbus cable type A, MAU type 1 and 3 (specified in IEC 61158-2). This cable meets the requirements for intrinsically safe applications according to IEC TS 60079-47 and can also be used in non-intrinsically safe applications.

Cable type	A
Cable capacitance	45 to 200 nF/km
Loop resistance	15 to 150 Ω/km
Cable inductance	0.4 to 1 mH/km

Further details are provided in the Ethernet-APL Engineering Guideline (https://www.ethernet-apl.org).

FOUNDATION Fieldbus

Twisted, shielded two-wire cable.

For further information on planning and installing FOUNDATION Fieldbus networks see:
- Operating Instructions for "FOUNDATION Fieldbus Overview" (BA00013S)
- FOUNDATION Fieldbus Guideline
- IEC 61158-2 (MBP)

Modbus RS485

The EIA/TIA-485 standard specifies two types of cable (A and B) for the bus line which can be used for every transmission rate. Cable type A is recommended.

Cable type	A
Characteristic impedance	135 to 165 Ω at a measuring frequency of 3 to 20 MHz
Cable capacitance	< 30 pF/m
Wire cross-section	> 0.34 mm^2 (22 AWG)
Cable type	Twisted pairs
Loop resistance	≤110 Ω/km

Signal damping	Max. 9 dB over the entire length of the cable cross-section
Shield	Copper braided shielding or braided shielding with foil shield. When grounding the cable shield, observe the grounding concept of the plant.

Current output 0/4 to 20 mA

Standard installation cable is sufficient

Pulse /frequency /switch output

Standard installation cable is sufficient

Double pulse output

Standard installation cable is sufficient

Relay output

Standard installation cable is sufficient.

Current input 0/4 to 20 mA

Standard installation cable is sufficient

Status input

Standard installation cable is sufficient

Connecting cable for transmitter - remote display and operating module DKX001

Standard cable

A standard cable can be used as the connecting cable.

Standard cable	4 cores (2 pairs); pair-stranded with common shield
Shielding	Tin-plated copper-braid, optical cover ≥ 85 %
Capacitance: core/shield	Maximum 1 000 nF for Zone 1; Class I, Division 1
L/R	Maximum 24 µH/Ω for Zone 1; Class I, Division 1
Cable length	Maximum 300 m (1 000 ft), see the following table

Cross-section	Cable length for use in: ▪ Non-hazardous area ▪ Hazardous area: Zone 2; Class I, Division 2 ▪ Hazardous area: Zone 1; Class I, Division 1
0.34 mm^2 (22 AWG)	80 m (270 ft)
0.50 mm^2 (20 AWG)	120 m (400 ft)
0.75 mm^2 (18 AWG)	180 m (600 ft)
1.00 mm^2 (17 AWG)	240 m (800 ft)
1.50 mm^2 (15 AWG)	300 m (1 000 ft)

Optionally available connecting cable

Standard cable	2 × 2 × 0.34 mm^2 (22 AWG) PVC cable [1] with common shield (2 pairs, pair-stranded)
Flame resistance	According to DIN EN 60332-1-2
Oil-resistance	According to DIN EN 60811-2-1
Shielding	Tin-plated copper-braid, optical cover ≥ 85 %
Capacitance: core/shield	≤200 pF/m

L/R	≤24 µH/Ω
Available cable length	10 m (35 ft)
Operating temperature	When mounted in a fixed position: −50 to +105 °C (−58 to +221 °F); when cable can move freely: −25 to +105 °C (−13 to +221 °F)

1) UV radiation can impair the cable outer sheath. Protect the cable from direct sunshine where possible.

Overvoltage protection

Mains voltage fluctuations	→ 34
Overvoltage category	Overvoltage category II
Short-term, temporary overvoltage	Up to 1200 V between cable and ground, for max. 5 s
Long-term, temporary overvoltage	Up to 500 V between cable and ground

Performance characteristics

Reference operating conditions

- Error limits based on ISO 11631
- Water with +15 to +45 °C (+59 to +113 °F) at 2 to 6 bar (29 to 87 psi)
- Specifications as per calibration protocol
- Accuracy based on accredited calibration rigs that are traced to ISO 17025.

To obtain measured errors, use the *Applicator* sizing tool → 97

Maximum measured error

o.r. = of reading; 1 g/cm³ = 1 kg/l; T = medium temperature

Base accuracy

Design fundamentals → 53

Mass flow and volume flow (liquids)

±0.10 % o.r.

Mass flow (gases)

±0.50 % o.r.

Density (liquids)

Under reference conditions [g/cm³]	Standard density calibration [1] [g/cm³]	Wide-range Density specification [2] [3] [g/cm³]
±0.0005	±0.02	±0.002

1) Valid over the entire temperature and density range
2) Valid range for special density calibration: 0 to 2 g/cm³, +5 to +80 °C (+41 to +176 °F)
3) order code for "Application package", option EE "Special density"

Temperature

±0.5 °C ± 0.005 · T °C (±0.9 °F ± 0.003 · (T − 32) °F)

Zero point stability

DN		Zero point stability	
[mm]	[in]	[kg/h]	[lb/min]
1	1/24	0.0008	0.00003
2	1/12	0.002	0.00007
4	1/8	0.014	0.0005
6	1/4	0.02	0.0007

Flow values

Flow values as turndown parameters depending on the nominal diameter.

SI units

DN	1:1	1:10	1:20	1:50	1:100	1:500
[mm]	[kg/h]	[kg/h]	[kg/h]	[kg/h]	[kg/h]	[kg/h]
1	20	2	1	0.4	0.2	0.04
2	100	10	5	2	1	0.2
4	450	45	22.5	9	4.5	0.9
6	1000	100	50	20	10	2

US units

DN	1:1	1:10	1:20	1:50	1:100	1:500
[inch]	[lb/min]	[lb/min]	[lb/min]	[lb/min]	[lb/min]	[lb/min]
1/24	0.735	0.074	0.037	0.015	0.007	0.001
1/12	3.675	0.368	0.184	0.074	0.037	0.007
1/8	16.54	1.654	0.827	0.331	0.165	0.033
1/4	36.75	3.675	1.838	0.735	0.368	0.074

Accuracy of outputs

The outputs have the following base accuracy specifications.

Current output

Accuracy	±5 µA

Pulse/frequency output

o.r. = of reading

Accuracy	Max. ±50 ppm o.r. (over the entire ambient temperature range)

Repeatability

o.r. = of reading; 1 g/cm^3 = 1 kg/l; T = medium temperature

Base repeatability

Design fundamentals → 📄 53

Mass flow and volume flow (liquids)

±0.05 % o.r.

Mass flow (gases)

±0.25 % o.r.

Density (liquids)

±0.00025 g/cm^3

Temperature

±0.25 °C ± 0.0025 · T °C (±0.45 °F ± 0.0015 · (T−32) °F)

Response time

The response time depends on the configuration (damping).

Influence of ambient temperature

Current output

Temperature coefficient	Max. 1 µA/°C

Pulse/frequency output

Temperature coefficient	No additional effect. Included in accuracy.

Influence of medium temperature

Mass flow and volume flow

o.f.s. = of full scale value

If there is a difference between the temperature during zero adjustment and the process temperature, the additional measured error of the sensors is typically ±0.0002 %o.f.s./°C (±0.0001 % o.f.s./°F).

The influence is reduced when the zero adjustment is performed at process temperature.

Density
If there is a difference between the density calibration temperature and the process temperature, the measured error of the sensors is typically ±0.00005 g/cm^3/°C (±0.000025 g/cm^3/°F). Field density adjustment is possible.

Wide-range density specification (special density calibration)
If the process temperature is outside the valid range (→ 📄 50) the measured error is ±0.00005 g/cm^3 /°C (±0.000025 g/cm^3 /°F)

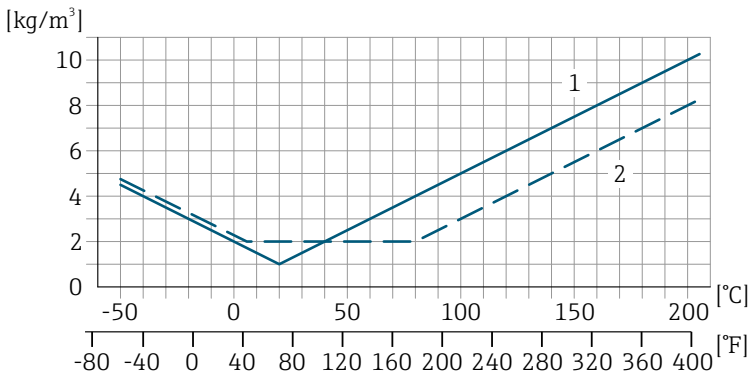

A0016617

1 *Field density adjustment, for example at +20 °C (+68 °F)*
2 *Special density calibration*

Temperature
±0.005 · T °C (± 0.005 · (T − 32) °F)

Influence of medium pressure

The tables below show the effect that a difference in pressure between the calibration pressure and the process pressure has on the accuracy in the case of the mass flow and density.

o.r. = of reading

It is possible to compensate for the effect by:
- Reading in the current pressure measured value via the current input or a digital input.
- Specifying a fixed value for the pressure in the device parameters.

Operating Instructions → 98.

DN		[% o.r./bar]	[% o.r./psi]
[mm]	[in]		
1	1/24	−0.001	−0.00007
2	1/12	0	0
4	1/8	−0.005	−0.0004
6	1/4	−0.003	−0.0002

Design fundamentals

o.r. = of reading, o.f.s. = of full scale value

BaseAccu = base accuracy in % o.r., BaseRepeat = base repeatability in % o.r.

MeasValue = measured value; ZeroPoint = zero point stability

Calculation of the maximum measured error as a function of the flow rate

Flow rate	Maximum measured error in % o.r.
$\geq \frac{\text{ZeroPoint}}{\text{BaseAccu}} \cdot 100$ A0021332	$\pm$ BaseAccu A0021339
$< \frac{\text{ZeroPoint}}{\text{BaseAccu}} \cdot 100$ A0021333	$\pm \frac{\text{ZeroPoint}}{\text{MeasValue}} \cdot 100$ A0021334

Calculation of the maximum repeatability as a function of the flow rate

Flow rate	Maximum repeatability in % o.r.
$\geq \frac{½ \cdot \text{ZeroPoint}}{\text{BaseRepeat}} \cdot 100$ A0021335	$\pm$ BaseRepeat A0021340
$< \frac{½ \cdot \text{ZeroPoint}}{\text{BaseRepeat}} \cdot 100$ A0021336	$\pm ½ \cdot \frac{\text{ZeroPoint}}{\text{MeasValue}} \cdot 100$ A0021337

Example of maximum measured error

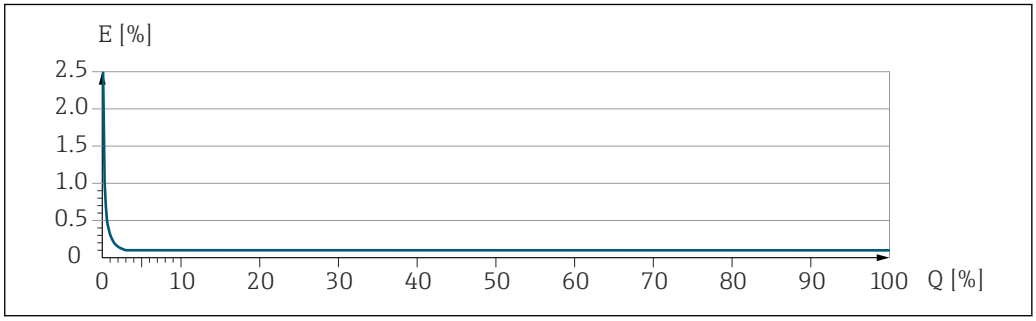

A0030288

E *Maximum measured error in % o.r. (example)*
Q *Flow rate in % of maximum full scale value*

Installation

Mounting location

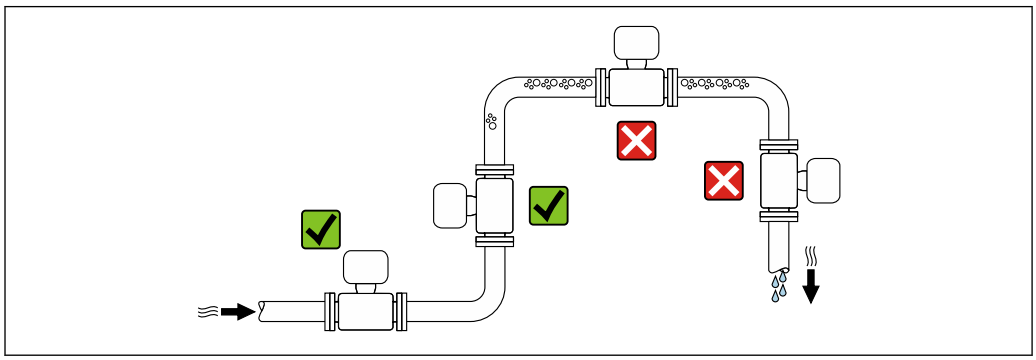

A0028772

To prevent measuring errors arising from accumulation of gas bubbles in the measuring pipe, avoid the following mounting locations in the piping:
- Highest point of a pipeline.
- Directly upstream of a free pipe outlet in a down pipe.

Installation in down pipes

However, the following installation suggestion allows for installation in an open vertical pipeline. Pipe restrictions or the use of an orifice with a smaller cross-section than the nominal diameter prevent the sensor running empty while measurement is in progress.

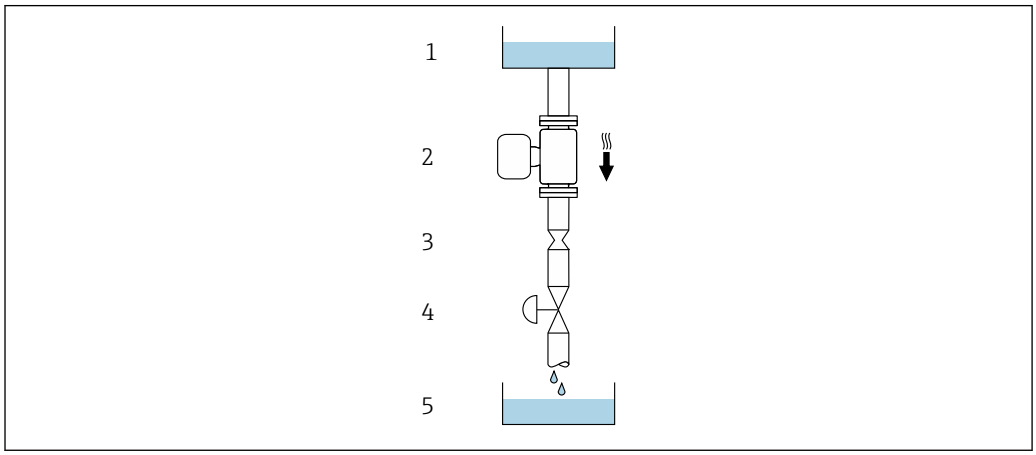

A0028773

22 Installation in a down pipe (e.g. for batching applications)

1 Supply tank
2 Sensor
3 Orifice plate, pipe restriction
4 Valve
5 Batching tank

DN		Ø orifice plate, pipe restriction	
[mm]	[in]	[mm]	[in]
1	1/24	0.8	0.03
2	1/12	1.5	0.06
4	1/8	3.0	0.12
6	1/4	5.0	0.20

Orientation

The direction of the arrow on the sensor nameplate helps you to install the sensor according to the flow direction (direction of medium flow through the piping).

Orientation			Recommendation
A	Vertical orientation	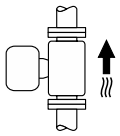 A0015591	✓✓
B	Horizontal orientation, transmitter at top	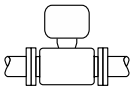 A0015589	✓✓ 1)
C	Horizontal orientation, transmitter at bottom	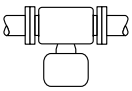 A0015590	✓✓ 2)
D	Horizontal orientation, transmitter at side	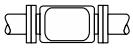 A0015592	✗

1) Applications with low process temperatures may reduce the ambient temperature. To maintain the minimum ambient temperature for the transmitter, this orientation is recommended.
2) Applications with high process temperatures may increase the ambient temperature. To maintain the maximum ambient temperature for the transmitter, this orientation is recommended.

Inlet and outlet runs

No special precautions need to be taken for fittings which create turbulence, such as valves, elbows or T-pieces, as long as no cavitation occurs → 🗎 61.

Special mounting instructions

Hygienic compatibility

- When installing in hygienic applications, please refer to the information in the "Certificates and approvals/hygienic compatibility" section
- In the case of measuring devices with the order code for "Housing", option B "Stainless, hygienic", to seal the connection compartment cover, screw it closed finger-tight and tighten it by another 45° (corresponds to 15 Nm).

Rupture disk

Process-related information: → 🗎 61.

⚠ WARNING

Danger from medium escaping!

Medium escaping under pressure can cause injury or material damage.

- ▶ Take precautions to prevent danger to persons and damage if the rupture disk is actuated.
- ▶ Observe the information on the rupture disk sticker.
- ▶ Make sure that the function and operation of the rupture disk is not impeded through the installation of the device.
- ▶ Do not use a heating jacket.
- ▶ Do not remove or damage the rupture disk.

The position of the rupture disk is indicated by a sticker affixed beside it.

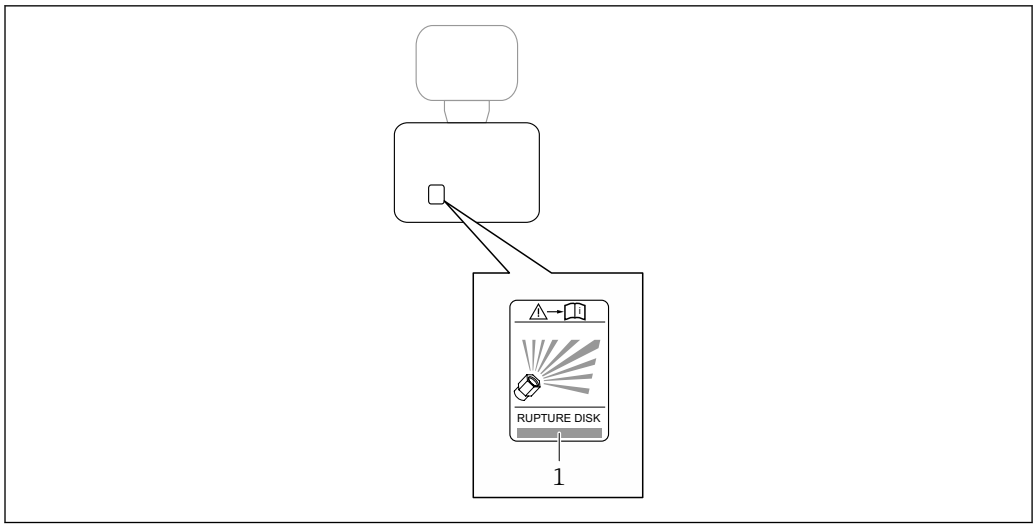

A0029940

1 Rupture disk label

Wall mounting

WARNING

Incorrect sensor mounting

Risk of injury if measuring tube breaks

- ▶ The sensor should never be installed in a pipe in a way that it is freely suspended
- ▶ Using the base plate, mount the sensor directly on the floor, wall or ceiling.
- ▶ Support the sensor on a securely mounted support base (e.g. angle bracket).

The following mounting versions are recommended for the installation.

Vertical

- Mounted directly on a wall using the base plate, or
- Device supported on an angle bracket mounted on the wall

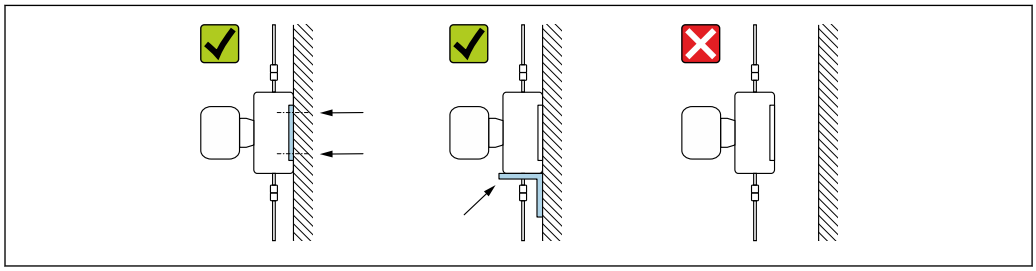

A0030286

Horizontal

Device standing on a solid support base

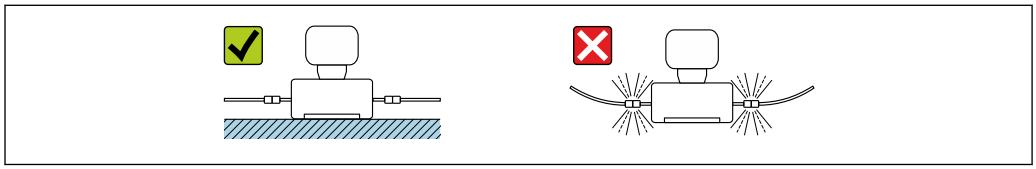

A0030287

Mounting plate

The universal mounting plate can be used to affix or place the unit on a flat surface (order code for "Accessories", option PA).

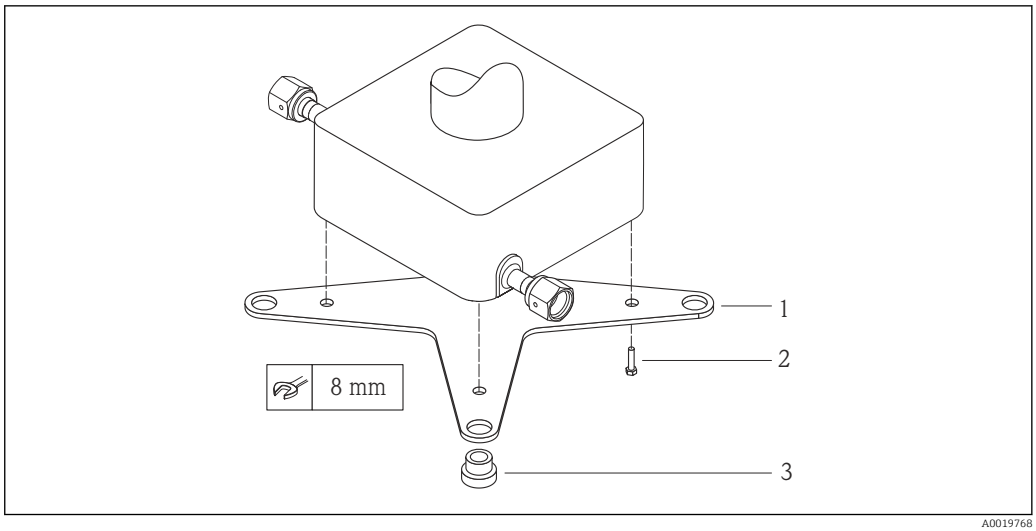

23 Mounting kit for Cubemass mounting plate

1 1 x Cubemass mounting plate
2 4 x screw M5 x 8
3 4 x grommet

Weather protection cover

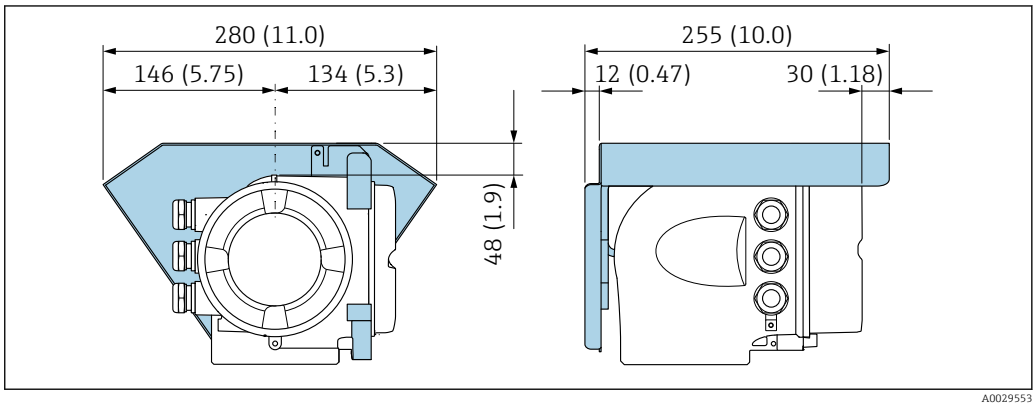

24 Engineering unit mm (in)

Environment

Ambient temperature range

Measuring device	▪ −40 to +60 °C (−40 to +140 °F) ▪ Order code for "Test, certificate", option JP: −50 to +60 °C (−58 to +140 °F)
Readability of the local display	−20 to +60 °C (−4 to +140 °F) The readability of the display may be impaired at temperatures outside the temperature range.

Dependency of ambient temperature on medium temperature → 59

- If operating outdoors:
  Avoid direct sunlight, particularly in warm climatic regions.

You can order a weather protection cover from Endress+Hauser. → 95.

Storage temperature	−50 to +80 °C (−58 to +176 °F)
Climate class	DIN EN 60068-2-38 (test Z/AD)
Relative humidity	The device is suitable for use in outdoor and indoor areas with a relative humidity of 4 to 95%.
Operating height	According to EN 61010-1 ▪ ≤ 2 000 m (6 562 ft) ▪ > 2 000 m (6 562 ft) with additional overvoltage protection (e.g. Endress+Hauser HAW Series)
Degree of protection	**Transmitter** ▪ IP66/67, Type 4X enclosure, suitable for pollution degree 4 ▪ When the housing is open: IP20, Type 1 enclosure, suitable for pollution degree 2 ▪ Display module: IP20, Type 1 enclosure, suitable for pollution degree 2 **Optional** **External WLAN antenna** IP67
Vibration- and shock-resistance	**Vibration sinusoidal, in accordance with IEC 60068-2-6** ▪ 2 to 8.4 Hz, 3.5 mm peak ▪ 8.4 to 2 000 Hz, 1 g peak **Vibration broad-band random, according to IEC 60068-2-64** ▪ 10 to 200 Hz, 0.003 g^2/Hz ▪ 200 to 2 000 Hz, 0.001 g^2/Hz ▪ Total: 1.54 g rms **Shock half-sine, according to IEC 60068-2-27** 6 ms 30 g **Rough handling shocks, according to IEC 60068-2-31**
Interior cleaning	▪ Cleaning in place (CIP) ▪ Sterilization in place (SIP) **Options** Oil- and grease-free version for wetted parts, without declaration Order code for "Service", option HA
Mechanical load	Transmitter housing: ▪ Protect against mechanical effects, such as shock or impact ▪ Do not use as a ladder or climbing aid
Electromagnetic compatibility (EMC)	▪ As per IEC/EN 61326 and NAMUR Recommendation 21 (NE 21) ▪ Device version with PROFIBUS DP: Complies with emission limits for industry as per EN 50170 Volume 2, IEC 61784 The following applies for PROFIBUS DP: If baud rates > 1.5 MBaud, an EMC cable entry must be used and the cable shield must continue as far as the terminal wherever possible. Details are provided in the Declaration of Conformity. This unit is not intended for use in residential environments and cannot guarantee adequate protection of the radio reception in such environments.

Process

Medium temperature range

−50 to +205 °C (−58 to +401 °F)

Dependency of ambient temperature on medium temperature

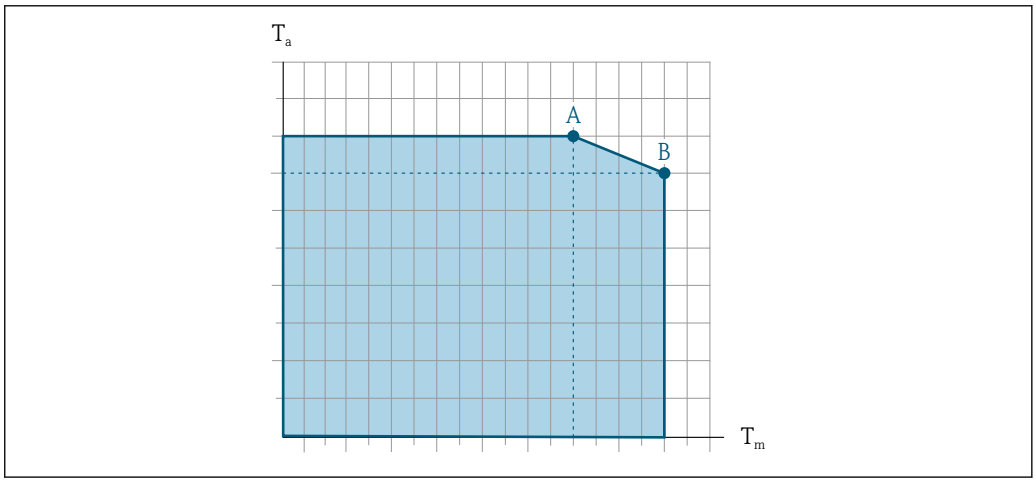

25 *Exemplary representation, values in the table below.*

T_a Ambient temperature
T_m Medium temperature
A Maximum permitted medium temperature T_m at $T_{a\,max}$ = 60 °C (140 °F); higher medium temperatures T_m require a reduction in the ambient temperature T_a
B Maximum permitted ambient temperature T_a for the maximum specified medium temperature T_m of the sensor

Values for devices that are used in the hazardous area:
Separate Ex documentation (XA) for the device → 98.

Not insulated				Insulated			
A		B		A		B	
T_a	T_m	T_a	T_m	T_a	T_m	T_a	T_m
60 °C (140 °F)	205 °C (401 °F)	–	–	60 °C (140 °F)	120 °C (248 °F)	55 °C (131 °F)	205 °C (401 °F)

Seals

For mounting sets with screwed-on connections:
- Viton: −15 to +200 °C (−5 to +392 °F)
- EPDM: −40 to +160 °C (−40 to +320 °F)
- Silicone: −60 to +200 °C (−76 to +392 °F)
- Kalrez: −20 to +275 °C (−4 to +527 °F)

Density

0 to 5 000 kg/m³ (0 to 312 lb/cf)

Pressure-temperature ratings

The following pressure/temperature diagrams apply to all pressure-bearing parts of the device and not just the process connection. The diagrams show the maximum permissible medium pressure depending on the specific medium temperature.

Flange connection according to EN 1092-1 (DIN 2501)

Order code for "Mounting kit", option PE

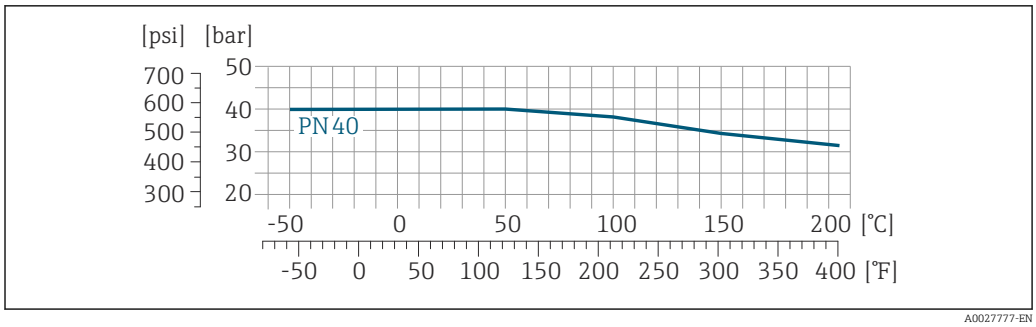

26 *With flange material: 1.4539 (904L), Alloy C22; lap joint flanges (not wetted) 1.4404 (316/316L)*

Flange connection according to ASME B16.5

Order code for "Mounting kit", option PF, PG

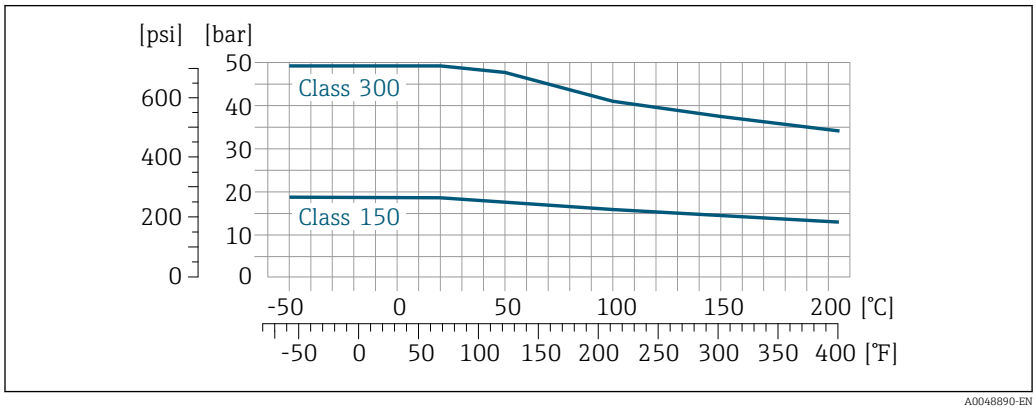

27 *With flange material: 1.4539 (904L); lap joint flanges (not wetted) 1.4404 (316/316L)*

Flange connection according to JIS B2220

Order code for "Mounting kit", option PH

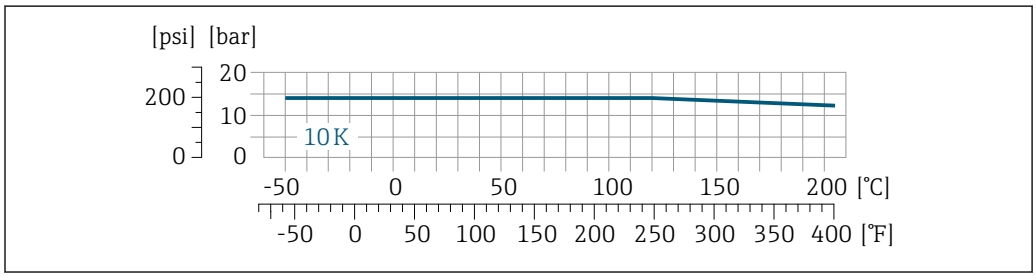

28 *With flange material: 1.4539 (904L); lap joint flanges (not wetted): 1.4404 (316/316L)*

Process connection 4-VCO-4, ¼ NPTF (DN 1 to 4); 8-VCO-4, ½ NPTF (DN 6)

Order code for "Mounting kit", option PC, PD

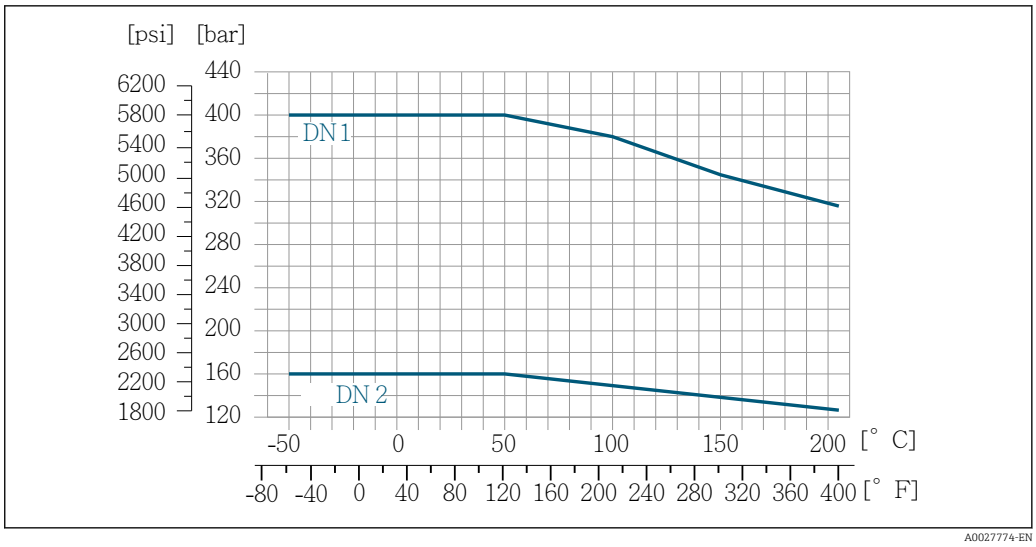

29 *4-VCO-4 coupling: 1.4539 (904L); 8-VCO-4 coupling: 1.4539 (904L); NPTF threaded adapter: 1.4539 (904L)*

Sensor housing

The sensor housing is filled with dry nitrogen gas and protects the electronics and mechanics inside.

Rupture disk

To guarantee the safety of the measuring device, the device version with a rupture disk with a triggering pressure of 10 to 15 bar (145 to 217.5 psi) is the standard version used. Special mounting instructions → 📄 55.

Flow limit

Select the nominal diameter by optimizing between the required flow range and permissible pressure loss.

For an overview of the full scale values for the measuring range, see the "Measuring range" section → 📄 10

- The minimum recommended full scale value is approx. 1/20 of the maximum full scale value
- In most applications, 20 to 50 % of the maximum full scale value can be considered ideal
- A low full scale value must be selected for abrasive media (such as liquids with entrained solids): flow velocity < 1 m/s (< 3 ft/s).
- For gas measurement the following rules apply:
  - The flow velocity in the measuring tubes should not exceed half the sound velocity (0.5 Mach).
  - The maximum mass flow depends on the density of the gas: formula

To calculate the flow limit, use the *Applicator* sizing tool → 📄 97

Pressure loss

To calculate the pressure loss, use the *Applicator* sizing tool → 📄 97

System pressure

It is important that cavitation does not occur, or that gases entrained in the liquids do not outgas. This is prevented by means of a sufficiently high system pressure.

For this reason, the following mounting locations are recommended:
- At the lowest point in a vertical pipe
- Downstream from pumps (no danger of vacuum)

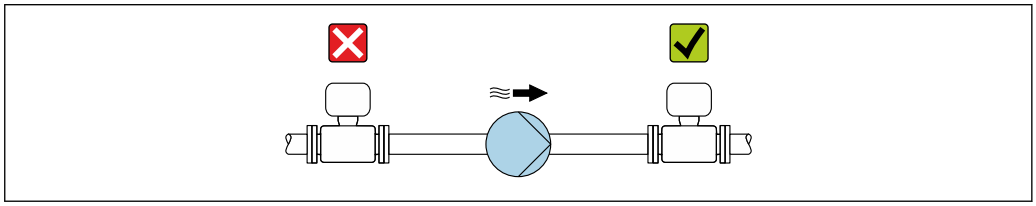

Thermal insulation

In the case of some fluids, it is important to keep the heat radiated from the sensor to the transmitter to a low level. A wide range of materials can be used for the required insulation.

NOTICE

Electronics overheating on account of thermal insulation!

- ▶ Recommended orientation: horizontal orientation, transmitter housing pointing downwards.
- ▶ Do not insulate the transmitter housing .
- ▶ Maximum permissible temperature at the lower end of the transmitter housing: 80 °C (176 °F)
- ▶ Thermal insulation with not isolated extended neck: We recommend that you do not insulate the extended neck in order to ensure optimum dissipation of heat.

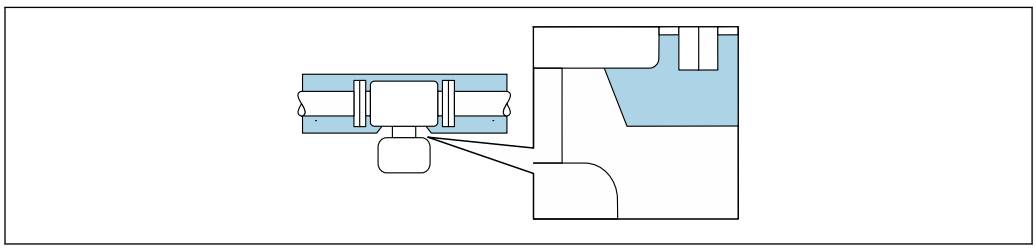

30 Thermal insulation with not isolated extended neck

Heating

Some fluids require suitable measures to avoid loss of heat at the sensor.

Heating options

- Electrical heating, e.g. with electric band heaters [1)]
- Via pipes carrying hot water or steam
- Via heating jackets

NOTICE

Danger of overheating when heating

- ▶ Ensure that the temperature at the lower end of the transmitter housing does not exceed 80 °C (176 °F).
- ▶ Ensure that sufficient convection takes place at the transmitter neck.
- ▶ Ensure that a sufficiently large area of the transmitter neck remains exposed. The uncovered part serves as a radiator and protects the electronics from overheating and excessive cooling.
- ▶ When using in potentially explosive atmospheres, observe the information in the device-specific Ex documentation. For detailed information on the temperature tables, see the separate document entitled "Safety Instructions" (XA) for the device.

Vibrations

The high oscillation frequency of the measuring tubes ensures that the correct operation of the measuring system is not influenced by plant vibrations.

1) The use of parallel electric band heaters is generally recommended (bidirectional electricity flow). Particular considerations must be made if a single-wire heating cable is to be used. Additional information is provided in the document EA01339D "Installation instructions for electrical trace heating systems" → 99

Mechanical construction

Dimensions in SI units

Compact version

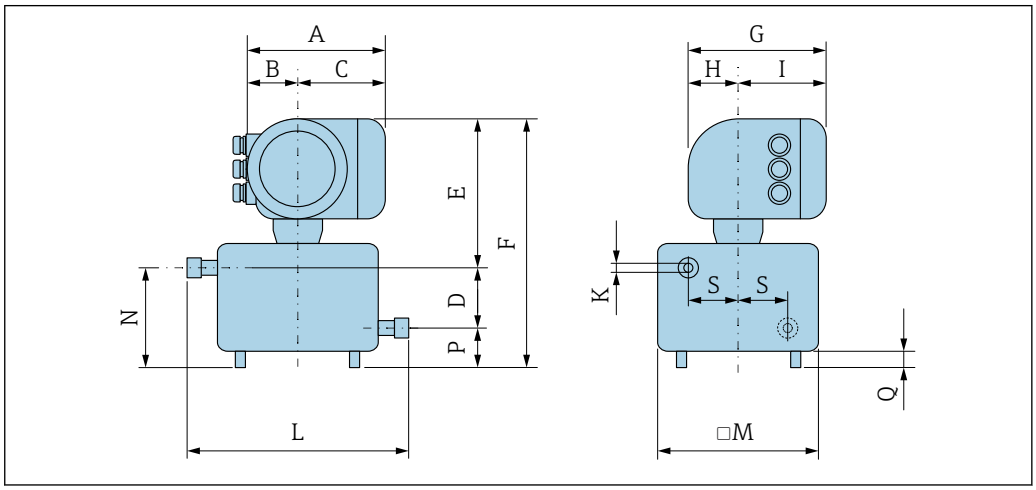

A0029826

DN [mm]	D [mm]	K [mm]	L [mm]	M [mm]	N [mm]	P [mm]	Q [mm]	S [mm]
1	30	1.4	175	121	52	22	10	42.9
2	30	2.5	175	121	52	22	10	42.9
4	30	3.9	175	121	52	22	10	42.9
6	30	5.35	175	121	52	22	10	42.9

Order code for "Housing", option A "Aluminum, coated"

DN [mm]	A [1)] [mm]	B [1)] [mm]	C [mm]	E [mm]	F [mm]	G [2)] [mm]	H [mm]	I [2)] [mm]
1 to 6	169	68	101	237	289	200	59	141

1) Depending on the cable gland used: values up to + 30 mm
2) For version without local display: values - 30 mm

Order code for "Housing", option A "Aluminum, coated"; Ex d

DN [mm]	A [1)] [mm]	B [mm]	C [mm]	E [mm]	F [mm]	G [2)] [mm]	H [mm]	I [mm]
1 to 6	188	85	103	238	290	217	58	159

1) Depending on the cable gland used: values up to + 30 mm
2) For version without local display: values - 40 mm

Couplings

VCO coupling

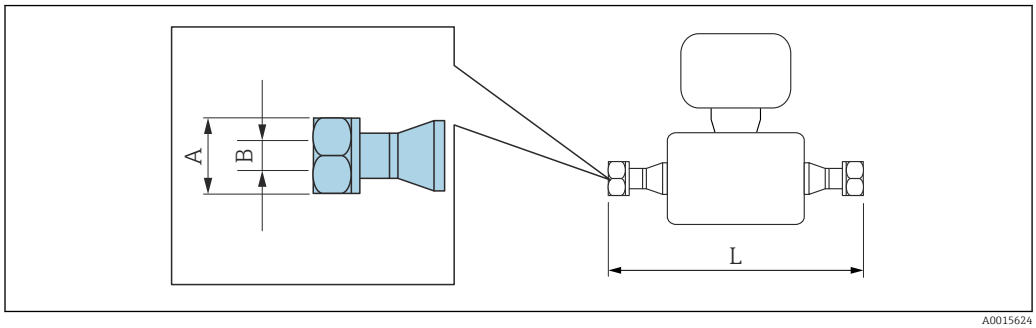

A0015624

Length tolerance for dimension L in mm:
+1.5 / −2.0

4-VCO-4 **1.4539 (904L):** *order code for "Process connection", option* **HAW**			
DN [mm]	**A [in]**	**B [mm]**	**L [mm]**
1	AF 11/16	12.5	175
2	AF 11/16	12.5	175
4	AF 11/16	12.5	175

8-VCO-4 **1.4404 (316/316L):** *order code for "Process connection", option* **CVS**			
DN [mm]	**A [in]**	**B [mm]**	**L [mm]**
6	AF 1	20	175

Adapter

Adapter, DN 15 flange to VCO

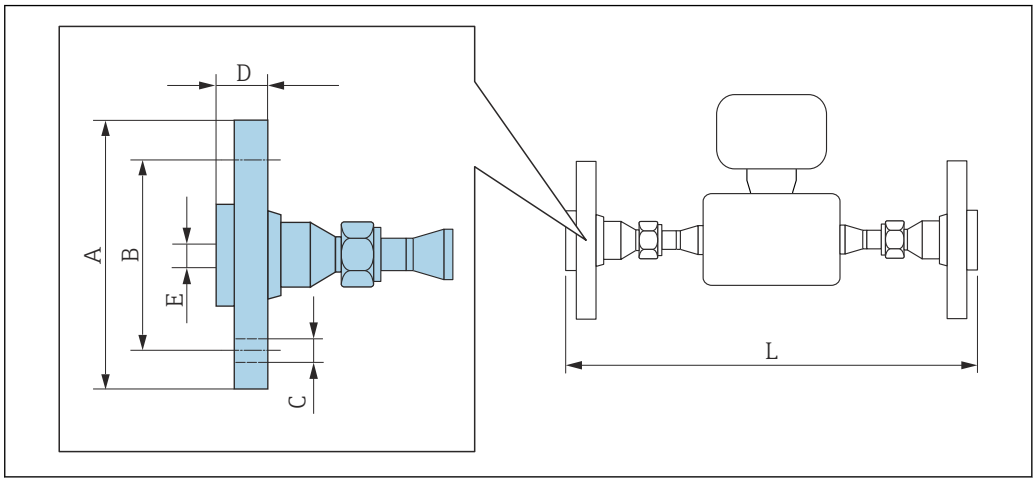

Length tolerance for dimension L in mm:
+1.5 / −2.0

Flange according to EN 1092-1 (DIN 2501): PN 40 **1.4539 (904L):** *order code for "Accessories", option* **PE**						
DN [mm]	**A [mm]**	**B [mm]**	**C [mm]**	**D [mm]**	**E [mm]**	**L [mm]**
1 to 6	95	65	4 × Ø14	28	17.3	278
DN 1 to 4 with 4-VCO-4, DN 6 with 8-VCO-4 Lap joint flanges (not wetted) made of stainless steel 1.4404 (316/316L) Sealing sets: order code for "Accessory enclosed", option **P1** (Viton), **P2** (EPDM), **P3** (silicone), **P4** (Kalrez)						

Flange according to ASME B16.5: Class 150 **1.4539 (904L):** *order code for "Accessories", option* **PF**						
DN [mm]	**A [mm]**	**B [mm]**	**C [mm]**	**D [mm]**	**E [mm]**	**L [mm]**
1 to 6	90.0	66.5	4 × Ø15.7	17.7	15.7	278
DN 1 to 4 with 4-VCO-4, DN 6 with 8-VCO-4 Lap joint flanges (not wetted) made of stainless steel 1.4404 (316/316L) Sealing sets: order code for "Accessory enclosed", option **P1** (Viton), **P2** (EPDM), **P3** (silicone), **P4** (Kalrez)						

Flange according to ASME B16.5: Class 300 **1.4539 (904L):** *order code for "Accessories", option* **PG**						
DN [mm]	**A [mm]**	**B [mm]**	**C [mm]**	**D [mm]**	**E [mm]**	**L [mm]**
1 to 6	95.0	66.5	4 × Ø15.7	20.7	15.7	278
DN 1 to 4 with 4-VCO-4, DN 6 with 8-VCO-4 Lap joint flanges (not wetted) made of stainless steel 1.4404 (316/316L) Sealing sets: order code for "Accessory enclosed", option **P1** (Viton), **P2** (EPDM), **P3** (silicone), **P4** (Kalrez)						

Flange JIS B2220: 10K **1.4539 (904L):** *order code for "Accessories", option* **PH**						
DN [mm]	**A [mm]**	**B [mm]**	**C [mm]**	**D [mm]**	**E [mm]**	**L [mm]**
1 to 6	95	70	4 × Ø15	28	15.0	278
DN 1 to 4 with 4-VCO-4, DN 6 with 8-VCO-4 Lap joint flanges (not wetted) made of stainless steel 1.4404 (316/316L) Sealing sets: order code for "Accessory enclosed", option **P1** (Viton), **P2** (EPDM), **P3** (silicone), **P4** (Kalrez)						

Adapter, NPTF to VCO

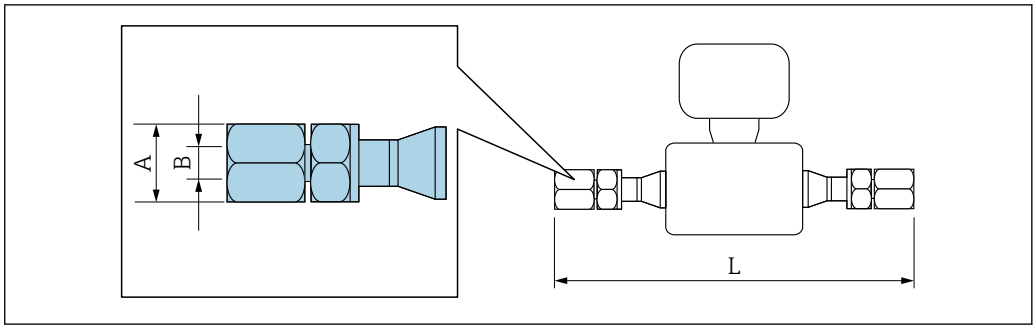

Length tolerance for dimension L in mm:
+1.5 / −2.0

¼" NPTF to 4-VCO-4 **1.4539 (904L):** *order code for "Accessories", option* **PC**			
DN [mm]	**A [in]**	**B [in]**	**L [mm]**
1 to 4	AF ¾	¼ NPT	246
Sealing sets: order code for "Accessory enclosed", option **P1** (Viton), **P2** (EPDM), **P3** (silicone), **P4** (Kalrez)			

¼" NPTF to 8-VCO-4 **1.4539 (904L):** *order code for "Accessories", option* **PD**			
DN [mm]	**A [in]**	**B [in]**	**L [mm]**
6	AF 11/16	½ NPT	246
Sealing sets: order code for "Accessory enclosed", option **P1** (Viton), **P2** (EPDM), **P3** (silicone), **P4** (Kalrez)			

Accessories

Weather protection cover

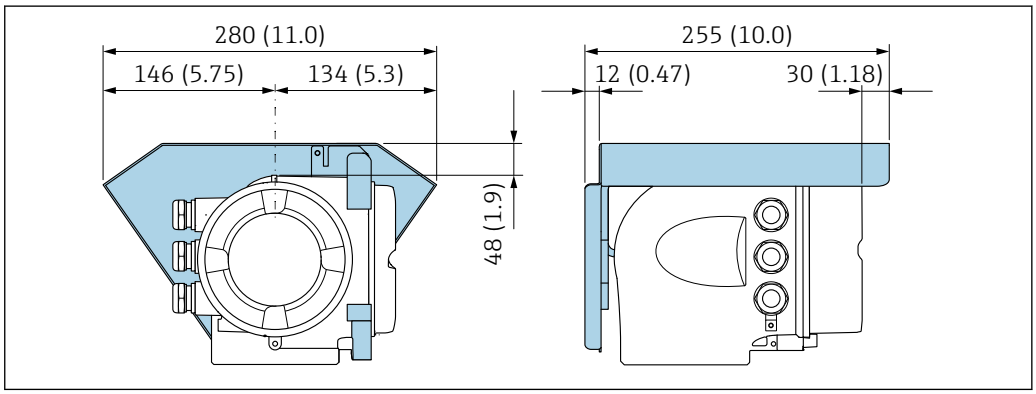

31 Engineering unit mm (in)

Remote display and operating module DKX001

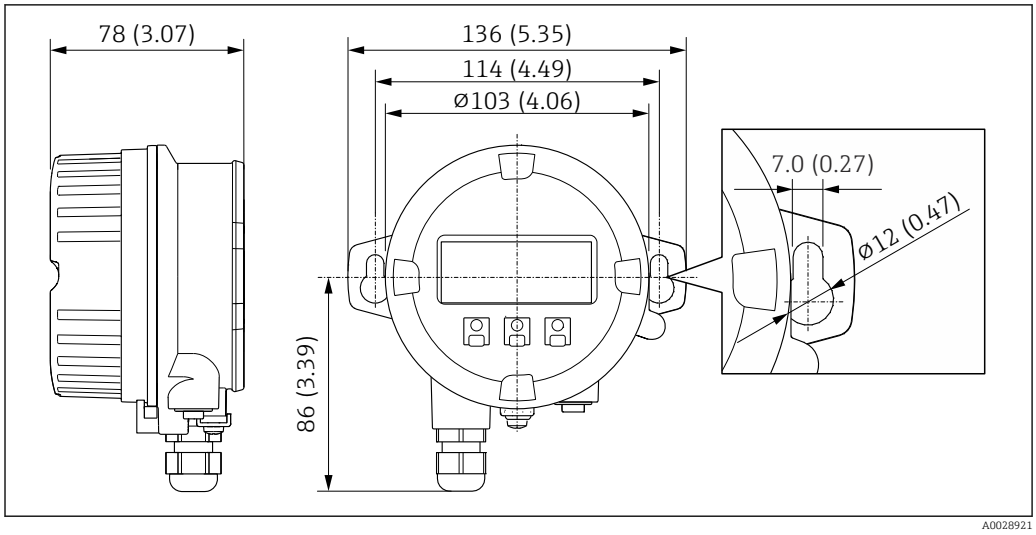

32 *Engineering unit mm (in)*

External WLAN antenna

The external WLAN antenna is not suitable for use in hygienic applications.

External WLAN antenna mounted on device

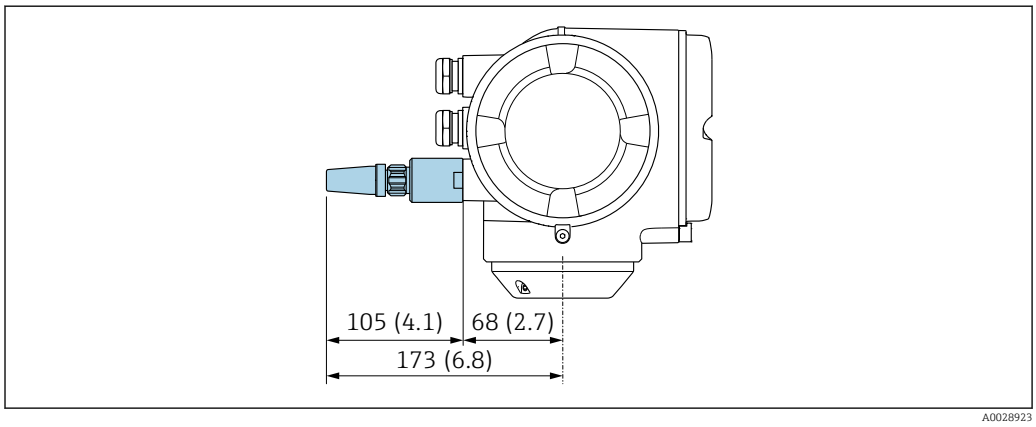

33 *Engineering unit mm (in)*

External WLAN antenna mounted with cable

The external WLAN antenna can be mounted separately from the transmitter if the transmission/reception conditions at the transmitter mounting location are poor.

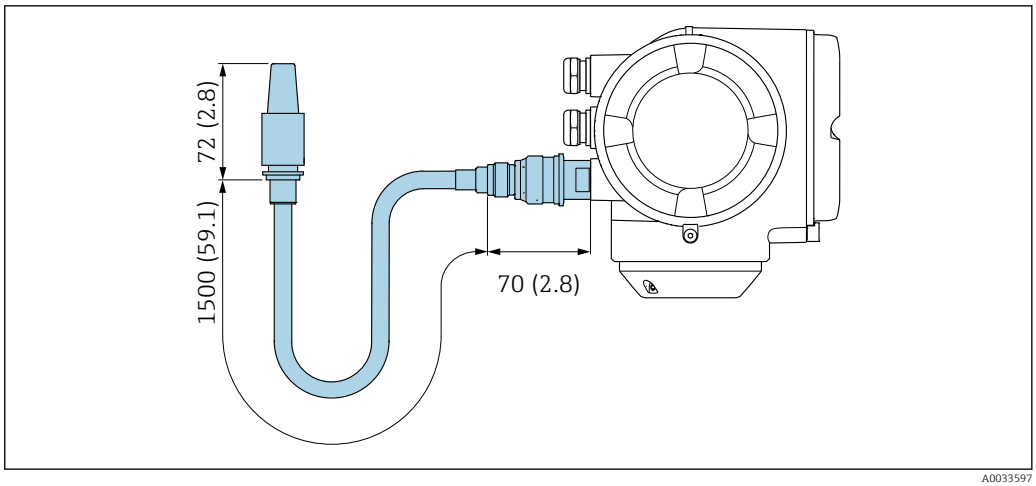

34 *Engineering unit mm (in)*

Dimensions in US units

Compact version

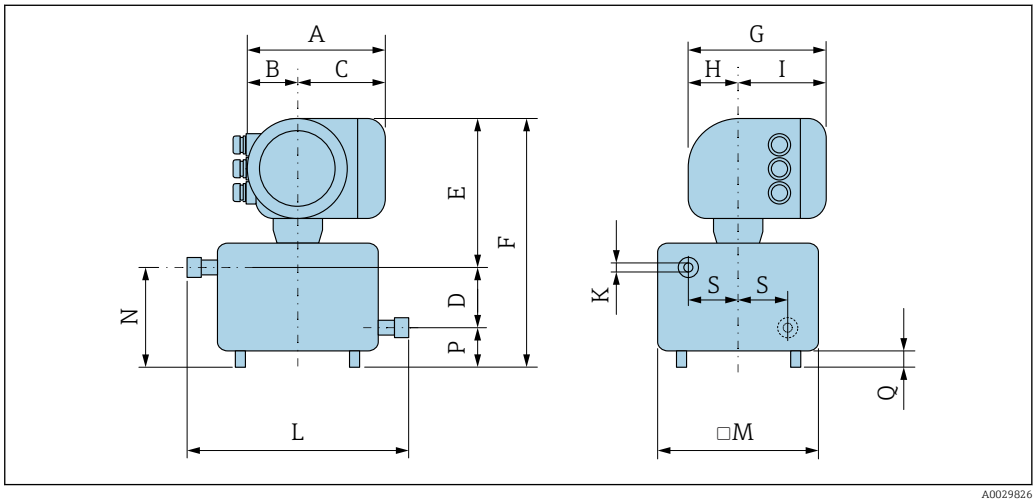

DN [in]	D [in]	K [in]	L [in]	M [in]	N [in]	P [in]	Q [in]	S [in]
1/24	1.18	0.06	6.89	4.76	2.05	0.87	0.39	1.69
1/12	1.18	0.10	6.89	4.76	2.05	0.87	0.39	1.69
1/8	1.18	0.15	6.89	4.76	2.05	0.87	0.39	1.69
1/4	1.18	0.211	6.89	4.76	2.05	0.87	0.39	1.69

Order code for "Housing", option A "Aluminum, coated"

DN [in]	A [1] [in]	B [1] [in]	C [in]	E [in]	F [in]	G [2] [in]	H [in]	I [2] [in]
1/24 to 1/4	6.65	2.68	3.98	9.33	11.38	7.87	2.32	5.55

1) Depending on the cable gland used: values up to + 1.18 in
2) For version without local display: values - 1.18 in

Order code for "Housing", option A "Aluminum, coated"; Ex d

DN [in]	A [1)] [in]	B [1)] [in]	C [in]	E [in]	F [in]	G [2)] [in]	H [in]	I [in]
1/24 to 1/4	7.40	3.35	4.06	9.37	11.42	8.54	2.28	6.26

1) Depending on the cable gland used: values up to + 1.18 in
2) For version without local display: values - 1.57 in

Couplings

VCO coupling

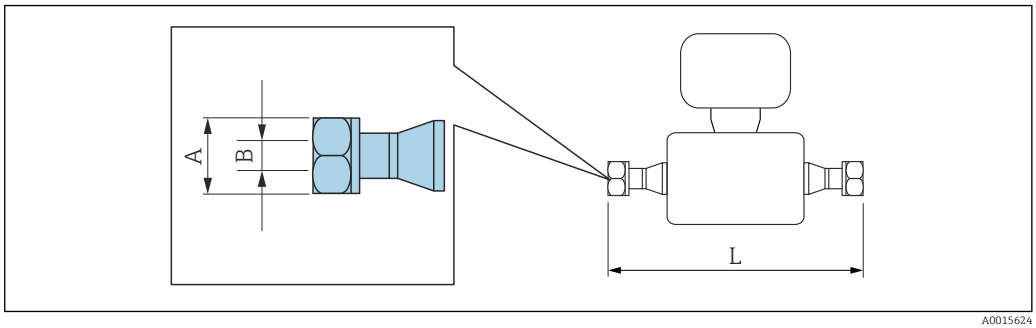

A0015624

Length tolerance for dimension L in inch:
+0.06 / −0.08

4-VCO-4 **1.4539 (904L):** *order code for "Process connection", option* **HAW**			
DN [mm]	**A [in]**	**B [in]**	**L [in]**
1/24	AF 11/16	0.49	6.89
1/12	AF 11/16	0.49	6.89
1/8	AF 11/16	0.49	6.89

8-VCO-4 **1.4404 (316/316L):** *order code for "Process connection", option* **CVS**			
DN [mm]	**A [in]**	**B [in]**	**L [in]**
1/4	AF 1	0.79	6.89

Adapter

Adapter, DN 15 flange to VCO

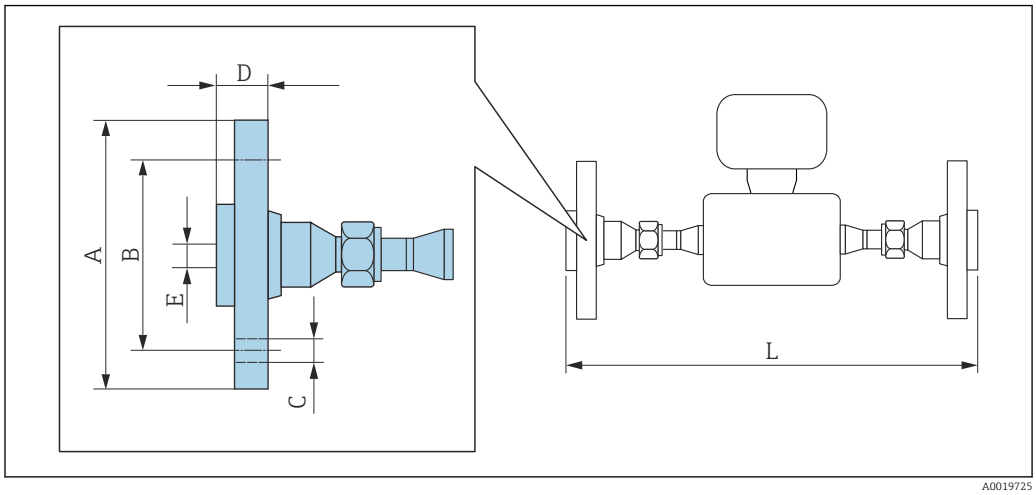

Length tolerance for dimension L in inch:
+0.06 / −0.08

Flange according to ASME B16.5: Class 150 **1.4539 (904L):** *order code for "Accessories", option* **PF**						
DN [in]	**A [in]**	**B [in]**	**C [in]**	**D [in]**	**E [in]**	**L [in]**
1/24 to 1/4	3.54	2.62	4 × Ø0.62	0.7	0.62	10.94
DN 1/24 to 1/8 with 4-VCO-4, DN 1/4 with 8-VCO-4 Lap joint flanges (not wetted) made of stainless steel 1.4404 (316/316L) Sealing sets: order code for "Accessory enclosed", option **P1** (Viton), **P2** (EPDM), **P3** (silicone), **P4** (Kalrez)						

Flange according to ASME B16.5: Class 300 **1.4539 (904L):** *order code for "Accessories, option* **PG**						
DN [in]	**A [in]**	**B [in]**	**C [in]**	**D [in]**	**E [in]**	**L [in]**
1/24 to 1/4	3.74	2.62	4 × Ø0.62	0.81	0.62	10.94
DN 1/24 to 1/8 with 4-VCO-4, DN 1/4 with 8-VCO-4 Lap joint flanges (not wetted) made of stainless steel 1.4404 (316/316L) Sealing sets: order code for "Accessory enclosed", option **P1** (Viton), **P2** (EPDM), **P3** (silicone), **P4** (Kalrez)						

Adapter, NPTF to VCO

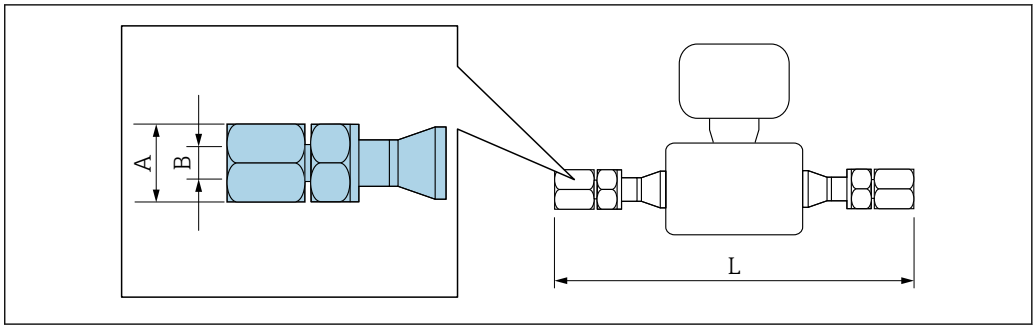

Length tolerance for dimension L in inch:
+0.06 / −0.08

¼" NPTF to 4-VCO-4 **1.4539 (904L):** *order code for "Accessories", option* **PC**			
DN [mm]	**A [in]**	**B [in]**	**L [in]**
1/24 to 1/8	AF ¾	¼ NPT	9.69
Sealing sets: order code for "Accessory enclosed", option **P1** (Viton), **P2** (EPDM), **P3** (silicone), **P4** (Kalrez)			

¼" NPTF to 8-VCO-4 **1.4539 (904L):** *order code for "Accessories", option* **PD**			
DN [mm]	**A [in]**	**B [in]**	**L [in]**
¼	AF 11/16	½ NPT	9.69
Sealing sets: order code for "Accessory enclosed", option **P1** (Viton), **P2** (EPDM), **P3** (silicone), **P4** (Kalrez)			

Accessories

Weather protection cover

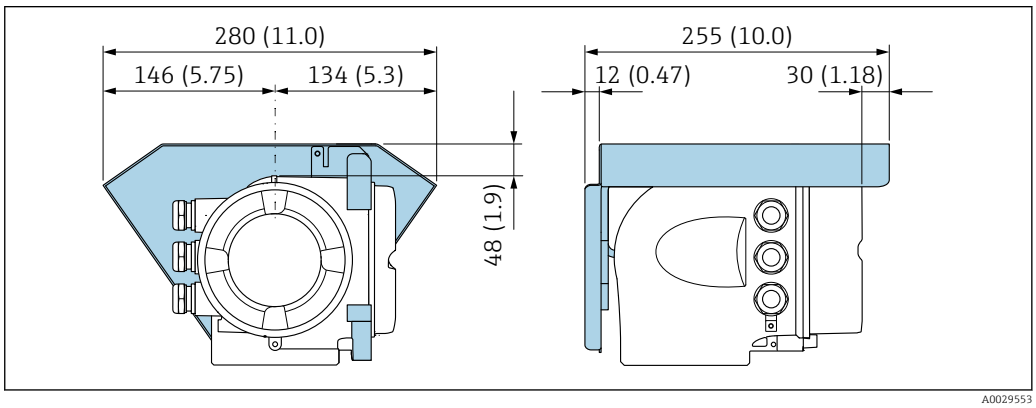

35 *Engineering unit mm (in)*

Remote display and operating module DKX001

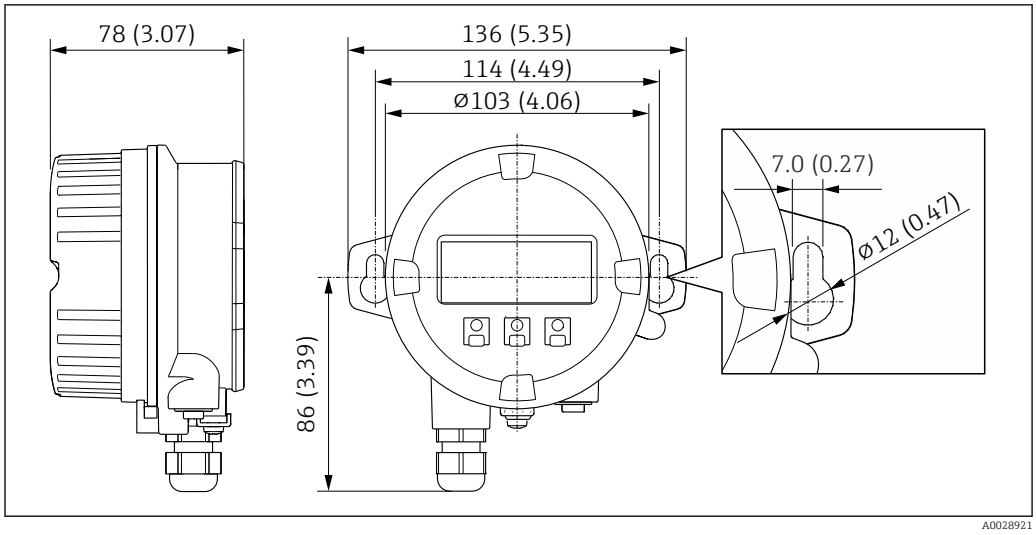

36 Engineering unit mm (in)

External WLAN antenna

The external WLAN antenna is not suitable for use in hygienic applications.

External WLAN antenna mounted on device

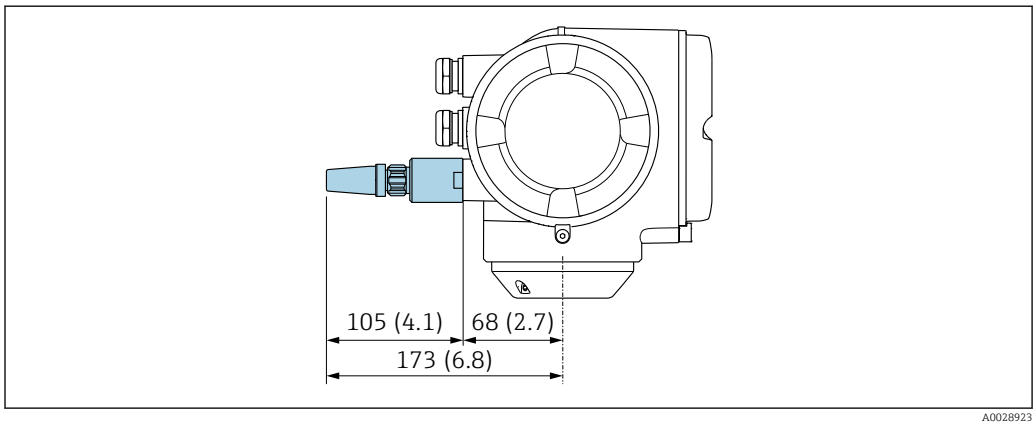

37 Engineering unit mm (in)

External WLAN antenna mounted with cable

The external WLAN antenna can be mounted separately from the transmitter if the transmission/reception conditions at the transmitter mounting location are poor.

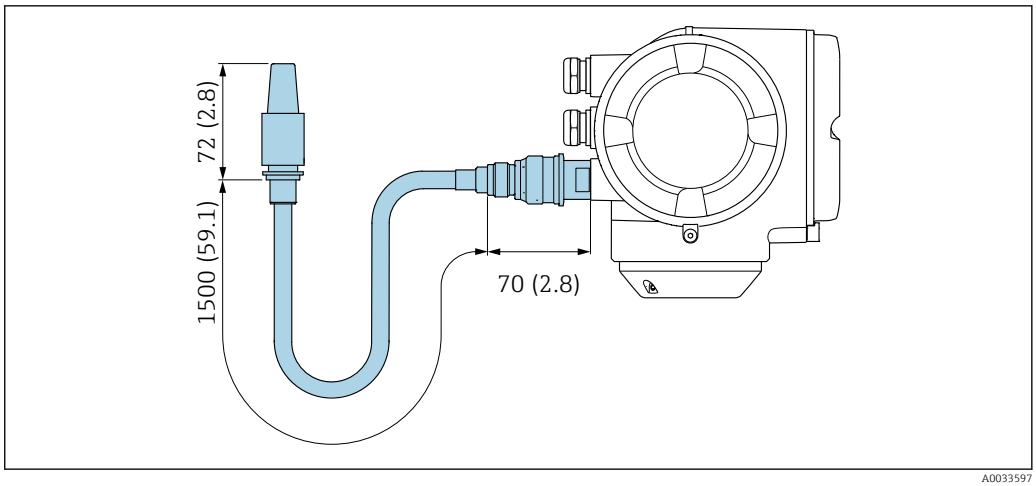

38 *Engineering unit mm (in)*

Weight

All values (weight exclusive of packaging material) refer to devices with VCO couplings. Weight specifications including transmitter as per order code for "Housing", option A "Aluminum, coated".

Different values due to different transmitter versions:
Transmitter version for the hazardous area
(Order code for "Housing", option A "Aluminum, coated"; Ex d): +2 kg (+4.4 lbs)

Weight in SI units

DN [mm]	Weight [kg]
1 to 6	5.3

Weight in US units

DN [in]	Weight [lbs]
1/24 to 1/4	12

Materials

Transmitter housing

Order code for "Housing":
Option **A** "Aluminum, coated": aluminum, AlSi10Mg, coated

Window material

Order code for "Housing":
Option **A** "Aluminum, coated": glass

Cable entries/cable glands

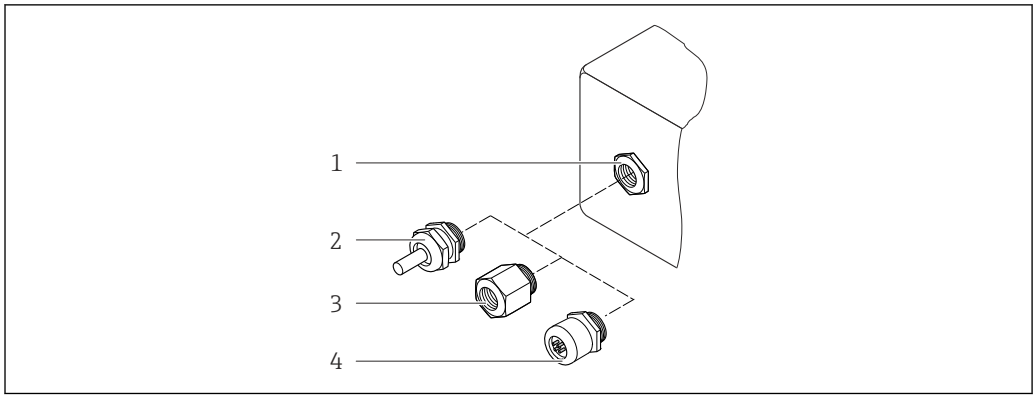

39 Possible cable entries/cable glands

1 Female thread M20 × 1.5
2 Cable gland M20 × 1.5
3 Adapter for cable entry with female thread G ½" or NPT ½"
4 Device plug

Order code for "Housing", option A "Aluminum, coated"

The various cable entries are suitable for hazardous and non-hazardous areas.

Cable entry/cable gland	Material
Compression fitting M20 × 1.5	Non-Ex: plastic
	Z2, D2, Ex d/de: brass with plastic
Adapter for cable entry with female thread G ½"	Nickel-plated brass
Adapter for cable entry with female thread NPT ½"	

Device plug

Electrical connection	Material
Plug M12x1	▪ Socket: Stainless steel, 1.4404 (316L) ▪ Contact housing: Polyamide ▪ Contacts: Gold-plated brass

Sensor housing

- Acid and alkali-resistant outer surface
- Stainless steel 1.4301 (304)

Measuring tubes

Stainless steel, 1.4539 (904L)

Process connections

VCO connection:
VCO connection: stainless steel, 1.4539 (904L)

Adapter for DN 15 flange according to EN 1092-1 (DIN2501) / according to ASME B 16.5 / as per JIS B2220:
Stainless steel, 1.4539 (904L)

NPTF adapter:
Stainless steel, 1.4539 (904L)

Available process connections→ 77

Seals

Welded process connections without internal seals

Seals for mounting kit
- Viton
- EPDM
- Silicone
- Kalrez

Accessories

Protective cover

Stainless steel, 1.4404 (316L)

External WLAN antenna

- Antenna: ASA plastic (acrylic ester-styrene-acrylonitrile) and nickel-plated brass
- Adapter: Stainless steel and nickel-plated brass
- Cable: Polyethylene
- Plug: Nickel-plated brass
- Angle bracket: Stainless steel

Process connections

- Fixed flange connections:
  - EN 1092-1 (DIN 2512N) flange
  - ASME B16.5 flange
  - JIS B2220 flange
- VCO connections:
  - 4-VCO-4
  - 8-VCO-4
- Adapter for VCO connections:
  - Flange EN 1092-1 (DIN 2501)
  - Flange ASME B16.5
  - Flange JIS B2220
  - NPT

Process connection materials → 76

Surface roughness

All data refer to parts in contact with the medium. The following surface roughness categories can be ordered.
Not polished

Operability

Operating concept

Operator-oriented menu structure for user-specific tasks
- Commissioning
- Operation
- Diagnostics
- Expert level

Fast and safe commissioning
- Guided menus ("Make-it-run" wizards) for applications
- Menu guidance with brief descriptions of the individual parameter functions
- Access to the device via Web server
- WLAN access to the device via mobile handheld terminal, tablet or smart phone

Reliable operation
- Operation in local language
- Uniform operating philosophy applied to device and operating tools
- If replacing electronic modules, transfer the device configuration via the integrated memory (HistoROM backup) which contains the process and measuring device data and the event logbook. No need to reconfigure.

Efficient diagnostic behavior increases measurement availability
- Troubleshooting measures can be called up via the device and in the operating tools
- Diverse simulation options, logbook for events that occur and optional line recorder functions

Languages

Can be operated in the following languages:
- Via local operation
  English, German, French, Spanish, Italian, Dutch, Portuguese, Polish, Russian, Turkish, Chinese, Japanese, Korean, Vietnamese, Czech, Swedish
- Via Web browser
  English, German, French, Spanish, Italian, Dutch, Portuguese, Polish, Russian, Turkish, Chinese, Japanese, Vietnamese, Czech, Swedish
- Via "FieldCare", "DeviceCare" operating tool: English, German, French, Spanish, Italian, Chinese, Japanese

Local operation

Via display module

Equipment:
- Order code for "Display; operation", option F "4-line, illuminated, graphic display; touch control"
- Order code for "Display; operation", option G "4-line, illuminated, graphic display; touch control + WLAN"

Information about WLAN interface → 86

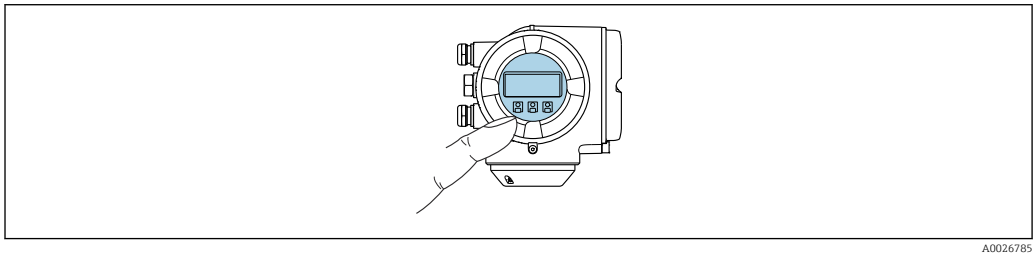

A0026785

40 Operation with touch control

Display elements

- 4-line, illuminated, graphic display
- White background lighting; switches to red in event of device errors
- Format for displaying measured variables and status variables can be individually configured
- Permitted ambient temperature for the display: −20 to +60 °C (−4 to +140 °F)
  The readability of the display may be impaired at temperatures outside the temperature range.

Operating elements

- External operation via touch control (3 optical keys) without opening the housing: ⊞, ⊟, Ⓔ
- Operating elements also accessible in the various zones of the hazardous area

Via remote display and operating module DKX001

The remote display and operating module DKX001 is available as an optional extra → 95.

- The measuring device is always supplied with a dummy cover when the remote display and operating module DKX001 is ordered directly with the measuring device. Display or operation at the transmitter is not possible in this case.
- If ordered subsequently, the remote display and operating module DKX001 may not be connected at the same time as the existing measuring device display module. Only one display or operation unit may be connected to the transmitter at any one time.

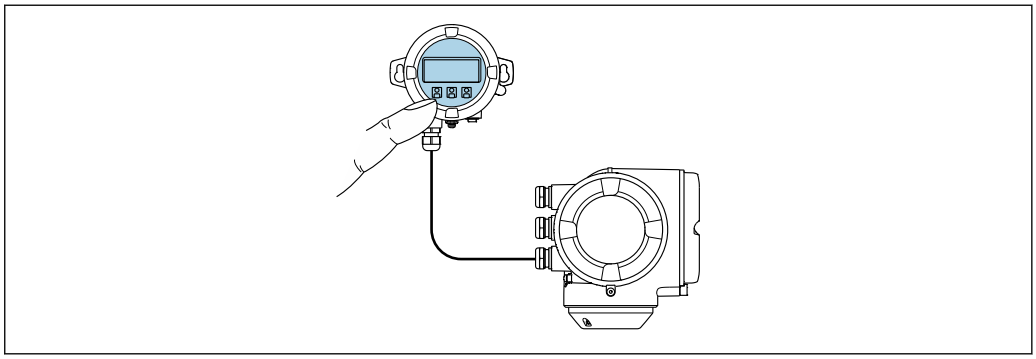

41 Operation via remote display and operating module DKX001

Display and operating elements

The display and operating elements correspond to those of the display module → 78.

Housing material

The housing material of the display and operating module DKX001 depends on the choice of transmitter housing material.

Transmitter housing		Remote display and operating module
Order code for "Housing"	**Material**	**Material**
Option **A** "Aluminum, coated"	AlSi10Mg, coated	AlSi10Mg, coated

Cable entry

Corresponds to the choice of transmitter housing, order code for "Electrical connection".

Connecting cable

→ 49

Dimensions

→ 68

Remote operation

Via HART protocol

This communication interface is available in device versions with a HART output.

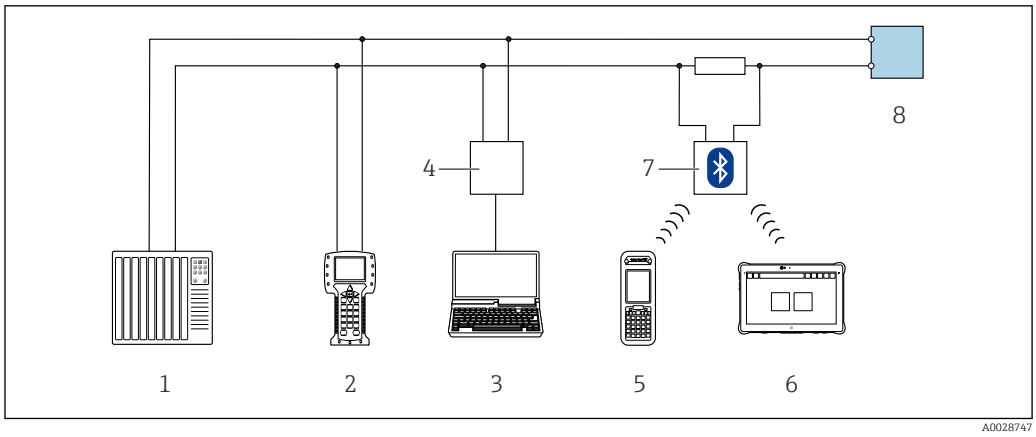

42 *Options for remote operation via HART protocol (active)*

1 *Control system (e.g. PLC)*
2 *Field Communicator 475*
3 *Computer with Web browser (e.g. Internet Explorer) for accessing the integrated device Web server or computer with operating tool (e.g. FieldCare, DeviceCare, AMS Device Manager, SIMATIC PDM) with COM DTM "CDI Communication TCP/IP"*
4 *Commubox FXA195 (USB)*
5 *Field Xpert SFX350 or SFX370*
6 *Field Xpert SMT70*
7 *VIATOR Bluetooth modem with connecting cable*
8 *Transmitter*

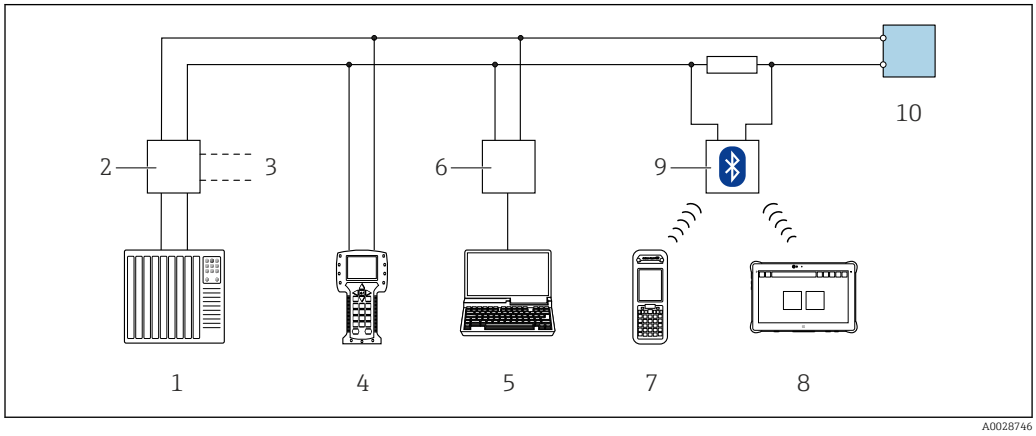

43 *Options for remote operation via HART protocol (passive)*

1 *Control system (e.g. PLC)*
2 *Transmitter power supply unit, e.g. RN221N (with communication resistor)*
3 *Connection for Commubox FXA195 and Field Communicator 475*
4 *Field Communicator 475*
5 *Computer with Web browser (e.g. Internet Explorer) for accessing the integrated device Web server or computer with operating tool (e.g. FieldCare, DeviceCare, AMS Device Manager, SIMATIC PDM) with COM DTM "CDI Communication TCP/IP"*
6 *Commubox FXA195 (USB)*
7 *Field Xpert SFX350 or SFX370*
8 *Field Xpert SMT70*
9 *VIATOR Bluetooth modem with connecting cable*
10 *Transmitter*

Via FOUNDATION Fieldbus network

This communication interface is available in device versions with FOUNDATION Fieldbus.

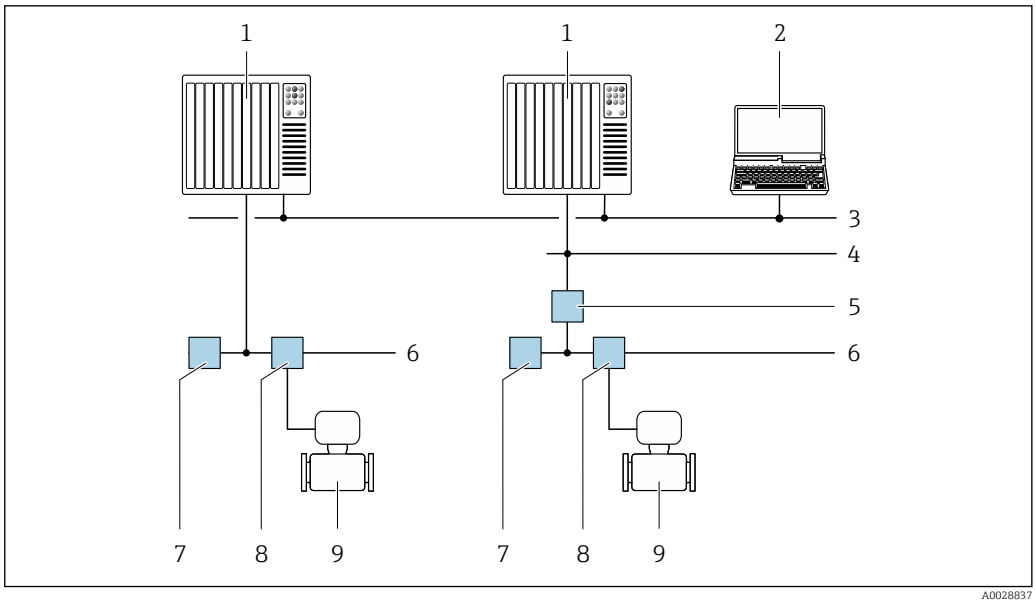

44 *Options for remote operation via FOUNDATION Fieldbus network*

1 *Automation system*
2 *Computer with FOUNDATION Fieldbus network card*
3 *Industry network*
4 *High Speed Ethernet FF-HSE network*
5 *Segment coupler FF-HSE/FF-H1*
6 *FOUNDATION Fieldbus FF-H1 network*
7 *Power supply FF-H1 network*
8 *T-box*
9 *Measuring device*

Via PROFIBUS DP network

This communication interface is available in device versions with PROFIBUS DP.

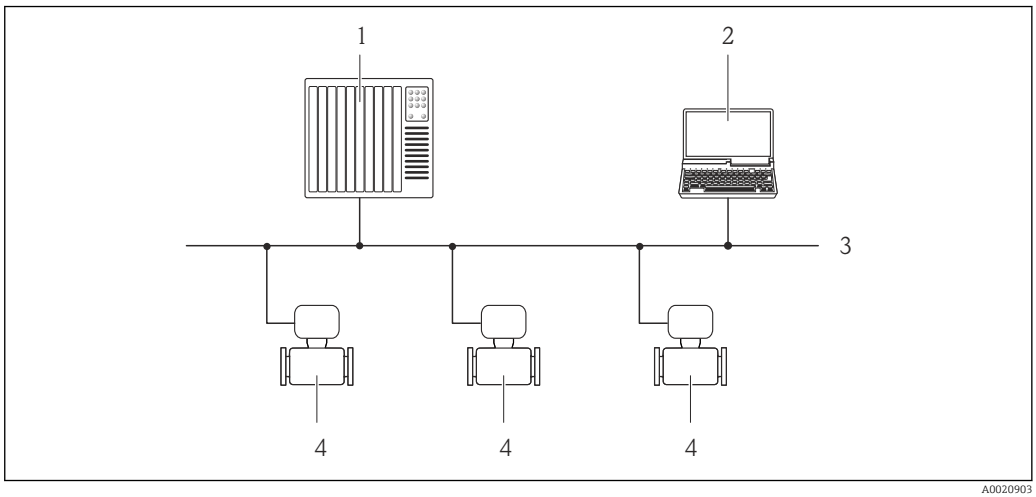

45 *Options for remote operation via PROFIBUS DP network*

1 *Automation system*
2 *Computer with PROFIBUS network card*
3 *PROFIBUS DP network*
4 *Measuring device*

Via PROFIBUS PA network

This communication interface is available in device versions with PROFIBUS PA.

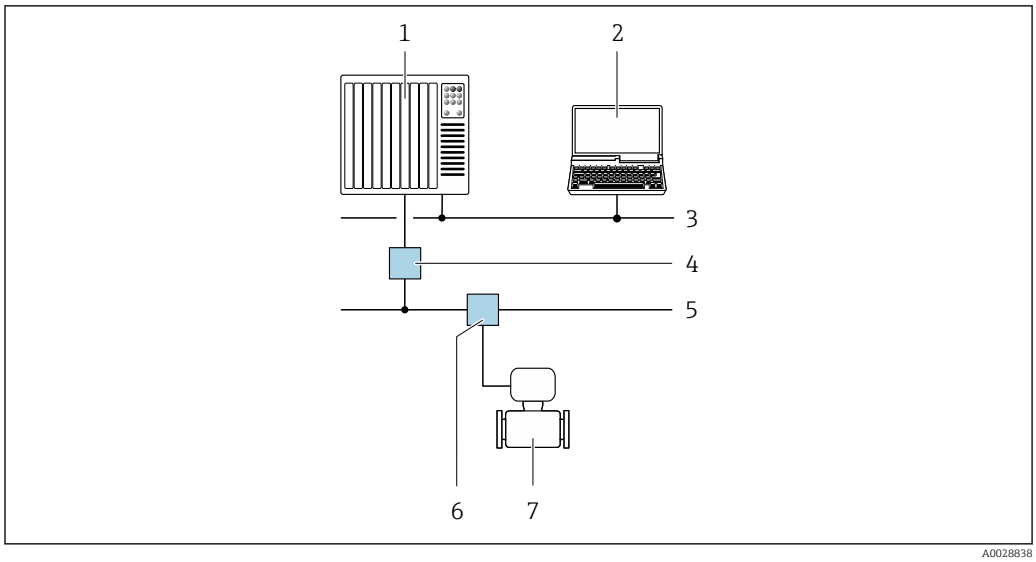

46 Options for remote operation via PROFIBUS PA network

1 *Automation system*
2 *Computer with PROFIBUS network card*
3 *PROFIBUS DP network*
4 *Segment coupler PROFIBUS DP/PA*
5 *PROFIBUS PA network*
6 *T-box*
7 *Measuring device*

Via Modbus RS485 protocol

This communication interface is available in device versions with a Modbus-RS485 output.

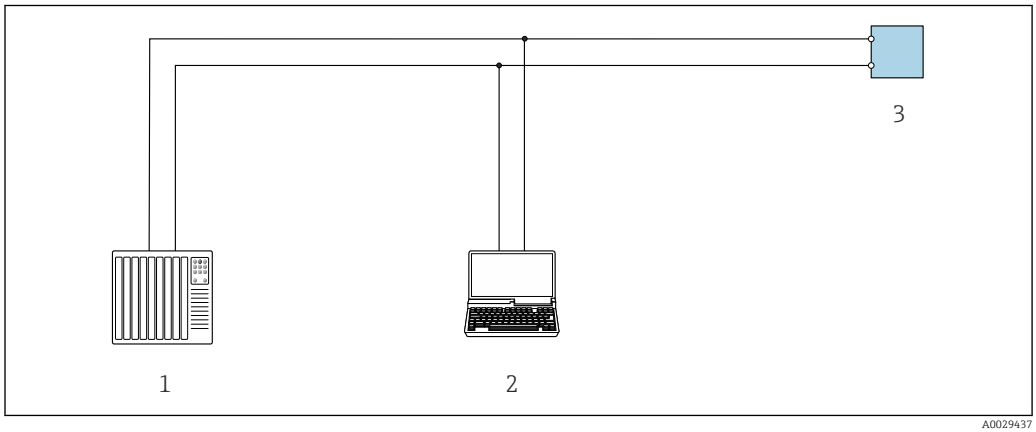

47 Options for remote operation via Modbus-RS485 protocol (active)

1 *Control system (e.g. PLC)*
2 *Computer with Web browser (e.g. Internet Explorer) for accessing the integrated device Web server or with operating tool (e.g. FieldCare, DeviceCare) with COM DTM "CDI Communication TCP/IP" or Modbus DTM*
3 *Transmitter*

Via EtherNet/IP network

This communication interface is available in device versions with EtherNet/IP.

Star topology

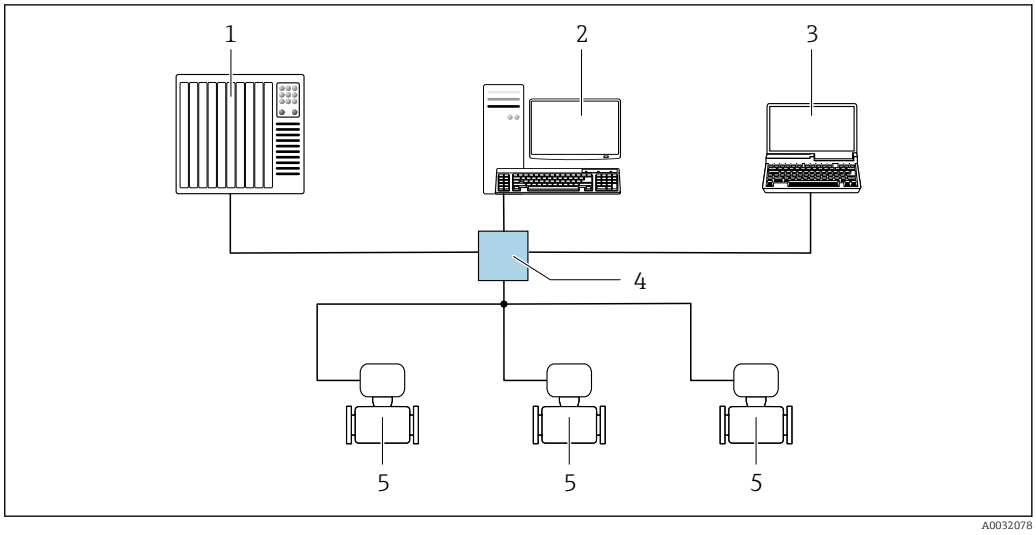

48 *Options for remote operation via EtherNet/IP network: star topology*

1 *Automation system, e.g. "RSLogix" (Rockwell Automation)*
2 *Workstation for measuring device operation: with Custom Add-On Profile for "RSLogix 5000" (Rockwell Automation) or with Electronic Data Sheet (EDS)*
3 *Computer with Web browser (e.g. Internet Explorer) for accessing the integrated Web server or computer with operating tool (e.g. FieldCare, DeviceCare) with COM DTM "CDI Communication TCP/IP"*
4 *Standard Ethernet switch, e.g. Scalance X204 (Siemens)*
5 *Measuring device*

Ring topology

The device is integrated via the terminal connection for signal transmission (output 1) and the service interface (CDI-RJ45).

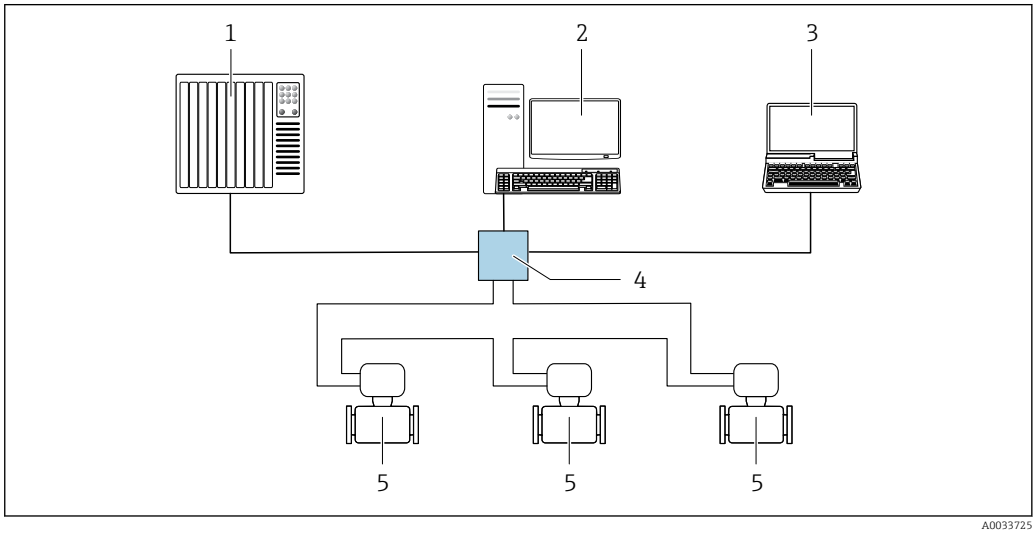

49 *Options for remote operation via EtherNet/IP network: ring topology*

1 *Automation system, e.g. "RSLogix" (Rockwell Automation)*
2 *Workstation for measuring device operation: with Custom Add-On Profile for "RSLogix 5000" (Rockwell Automation) or with Electronic Data Sheet (EDS)*
3 *Computer with Web browser (e.g. Internet Explorer) for accessing the integrated Web server or computer with operating tool (e.g. FieldCare, DeviceCare) with COM DTM "CDI Communication TCP/IP"*
4 *Standard Ethernet switch, e.g. Scalance X204 (Siemens)*
5 *Measuring device*

Via PROFINET network

This communication interface is available in device versions with PROFINET.

Star topology

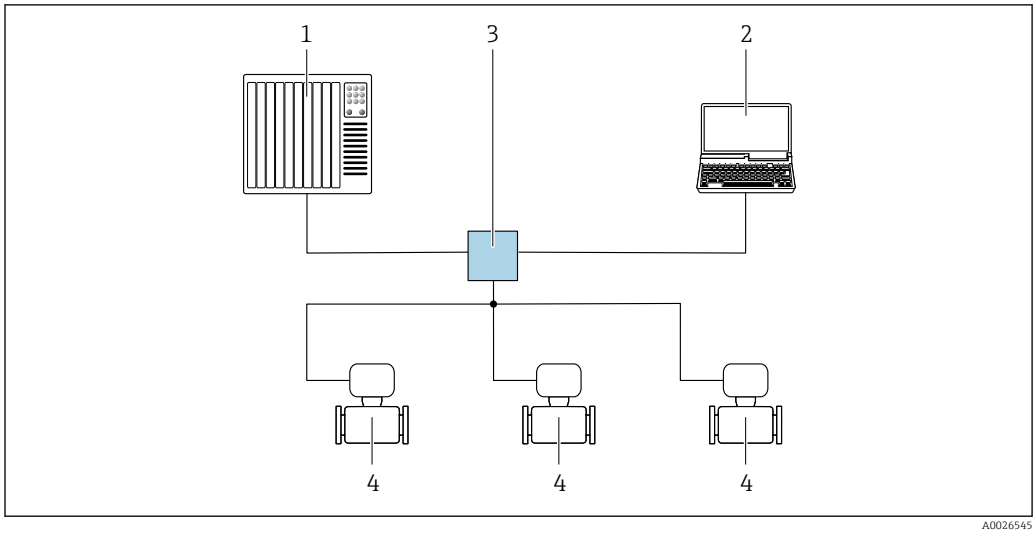

50 Options for remote operation via PROFINET network: star topology

1 *Automation system, e.g. Simatic S7 (Siemens)*
2 *Computer with Web browser (e.g. Internet Explorer) for accessing the integrated Web server or computer with operating tool (e.g. FieldCare, DeviceCare, SIMATIC PDM) with COM DTM "CDI Communication TCP/IP"*
3 *Standard Ethernet switch, e.g. Scalance X204 (Siemens)*
4 *Measuring device*

Ring topology

The device is integrated via the terminal connection for signal transmission (output 1) and the service interface (CDI-RJ45).

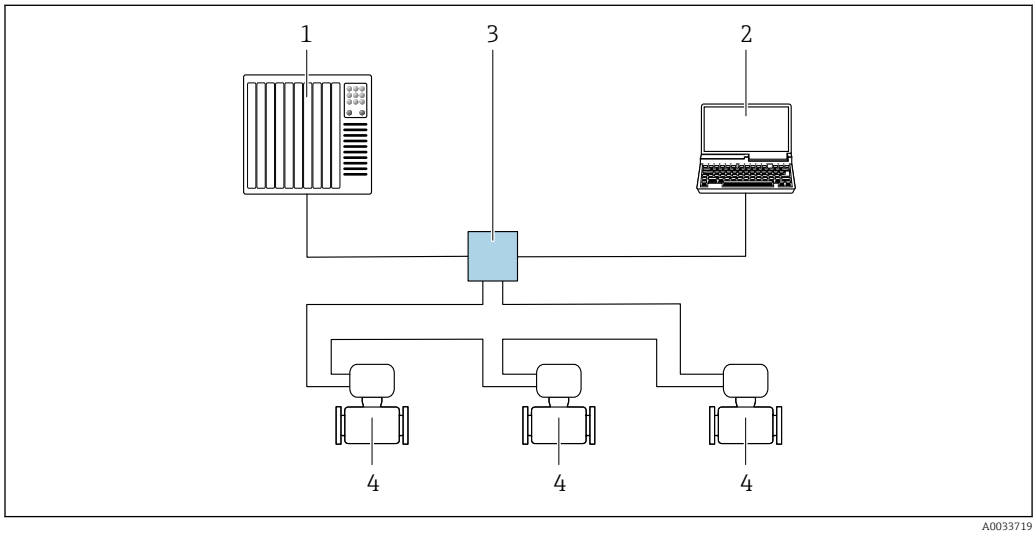

51 Options for remote operation via PROFINET network: ring topology

1 *Automation system, e.g. Simatic S7 (Siemens)*
2 *Computer with Web browser (e.g. Internet Explorer) for accessing the integrated Web server or computer with operating tool (e.g. FieldCare, DeviceCare, SIMATIC PDM) with COM DTM "CDI Communication TCP/IP"*
3 *Standard Ethernet switch, e.g. Scalance X204 (Siemens)*
4 *Measuring device*

Via APL network

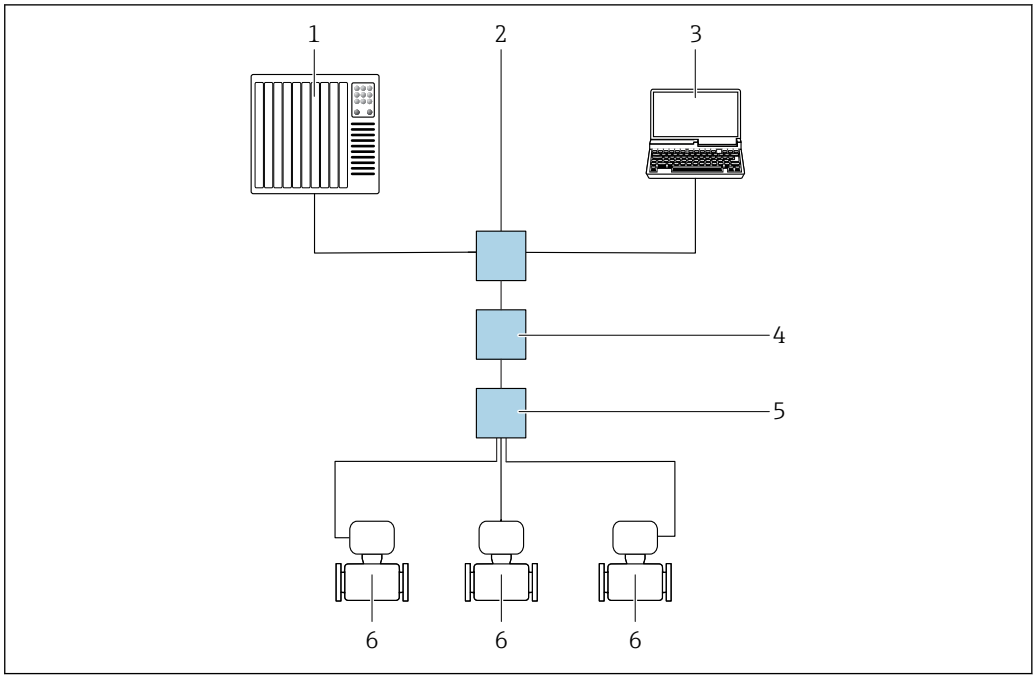

52 *Options for remote operation via APL network*

1 *Automation system, e.g. Simatic S7 (Siemens)*
2 *Ethernet switch, e.g. Scalance X204 (Siemens)*
3 *Computer with Web browser (e.g. Internet Explorer) for access to integrated Web server or computer with operating tool (e.g. FieldCare or DeviceCare with PROFINET COM DTM or SIMATIC PDM with FDI-Package)*
4 *APL power switch (optional)*
5 *APL field switch*
6 *Measuring device*

Service interface

Via service interface (CDI-RJ45)

A point-to-point connection can be established via onsite device configuration. With the housing open, the connection is established directly via the service interface (CDI-RJ45) of the device.

An adapter for RJ45 to the M12 plug is optionally available:
Order code for "Accessories", option **NB**: "Adapter RJ45 M12 (service interface)"

The adapter connects the service interface (CDI-RJ45) to an M12 plug mounted in the cable entry. The connection to the service interface can be established via an M12 plug without opening the device.

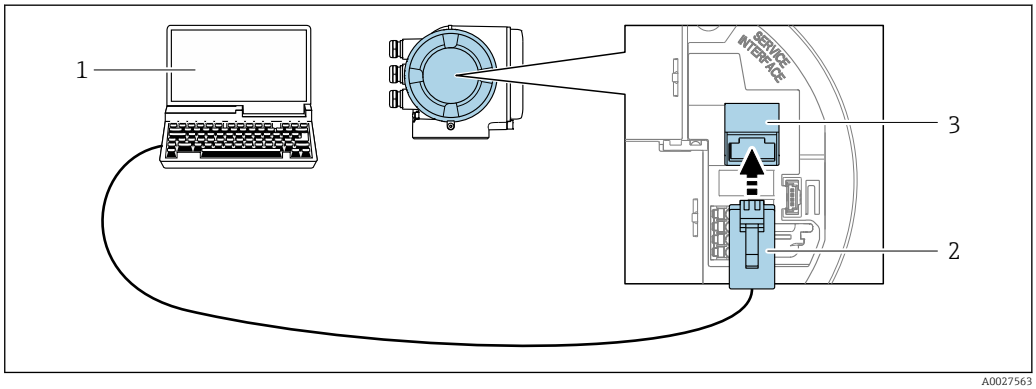

53 *Connection via service interface (CDI-RJ45)*

1 *Computer with Web browser (e.g. Microsoft Internet Explorer, Microsoft Edge) for accessing the integrated Web server or with "FieldCare", "DeviceCare" operating tool with COM DTM "CDI Communication TCP/IP" or Modbus DTM*
2 *Standard Ethernet connecting cable with RJ45 plug*
3 *Service interface (CDI-RJ45) of the measuring device with access to the integrated Web server*

Via WLAN interface

The optional WLAN interface is available on the following device version:
Order code for "Display; operation", option G "4-line, illuminated; touch control + WLAN"

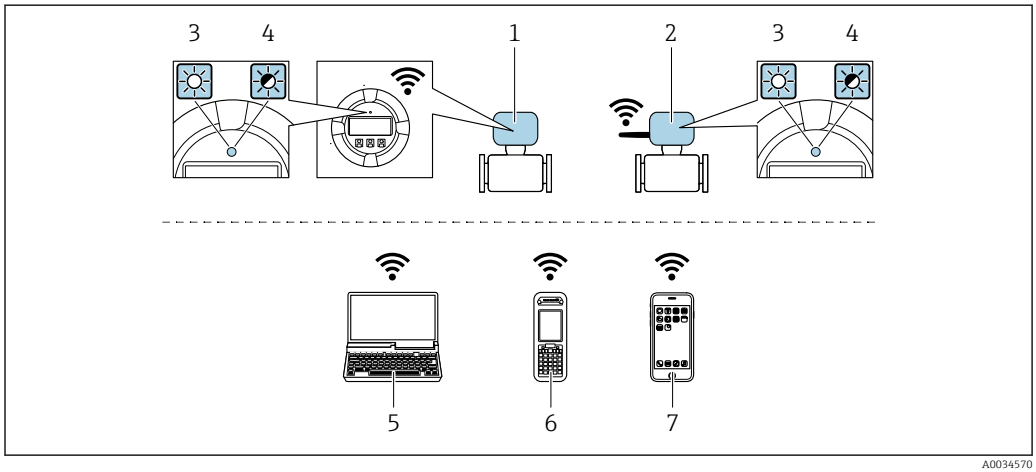

1 *Transmitter with integrated WLAN antenna*
2 *Transmitter with external WLAN antenna*
3 *LED lit constantly: WLAN reception is enabled on measuring device*
4 *LED flashing: WLAN connection established between operating unit and measuring device*
5 *Computer with WLAN interface and Web browser (e.g. Microsoft Internet Explorer, Microsoft Edge) for accessing the integrated device Web server or with operating tool (e.g. FieldCare, DeviceCare)*
6 *Mobile handheld terminal with WLAN interface and Web browser (e.g. Microsoft Internet Explorer, Microsoft Edge) for accessing the integrated device Web server or operating tool (e.g. FieldCare, DeviceCare)*
7 *Smart phone or tablet (e.g. Field Xpert SMT70)*

Function	WLAN: IEEE 802.11 b/g (2.4 GHz) ▪ Access Point with DHCP server (factory setting) ▪ Network
Encryption	WPA2-PSK AES-128 (in accordance with IEEE 802.11i)
Configurable WLAN channels	1 to 11
Degree of protection	IP67
Available antennas	▪ Internal antenna ▪ External antenna (optional) In the event of poor transmission/reception conditions at the place of installation. Available as an accessory . Only 1 antenna is active at any one time!
Range	▪ Internal antenna: typically 10 m (32 ft) ▪ External antenna: typically 50 m (164 ft)
Materials (external antenna)	▪ Antenna: ASA plastic (acrylic ester-styrene-acrylonitrile) and nickel-plated brass ▪ Adapter: Stainless steel and nickel-plated brass ▪ Cable: Polyethylene ▪ Plug: Nickel-plated brass ▪ Angle bracket: Stainless steel

Network integration

Network integration is only available for the HART communication protocol.

With the optional "OPC-UA Server" application package, the device can be integrated into an Ethernet network via the service interface (CDI-RJ45 and WLAN) and communicate with OPC-UA clients. If the device is used in this way, IT security must be considered.

Transmitters with an Ex de approval may **not** be connected via the service interface (CDI-RJ45)!
Order code for "Approval transmitter + sensor", options (Ex de):
BB, C2, GB, MB, NB

For permanent access to device data and for device configuration via the Web server, the device is incorporated directly in a network via the service interface (CDI-RJ45). In this way, the device can be accessed any time from the control station. The measured values are processed separately via the inputs and outputs through the automation system.

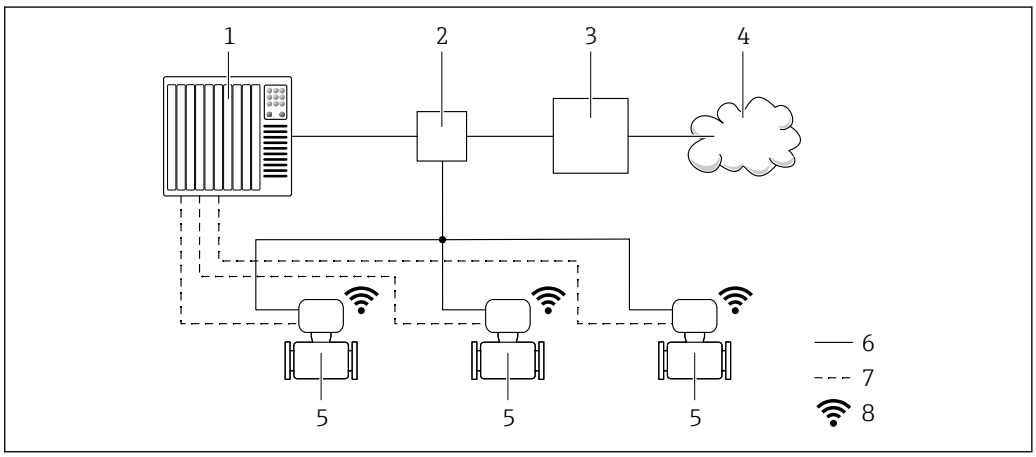

1 *Automation system, e.g. Simatic S7 (Siemens)*
2 *Ethernet switch*
3 *Edge Gateway*
4 *Cloud*
5 *Measuring device*
6 *Ethernet network*
7 *Measured values via inputs and outputs*
8 *Optional WLAN interface*

The optional WLAN interface is available on the following device version:
Order code for "Display; operation", option **G** "4-line, backlit, graphic display; touch control + WLAN"

Special Documentation for the OPC-UA Server application package → 99.

Supported operating tools

Different operating tools can be used for local or remote access to the measuring device. Depending on the operating tool used, access is possible with different operating units and via a variety of interfaces.

Supported operating tools	Operating unit	Interface	Additional information
Web browser	Notebook, PC or tablet with Web browser	▪ CDI-RJ45 service interface ▪ WLAN interface ▪ Ethernet-based fieldbus (EtherNet/IP, PROFINET)	Special Documentation for the device → 99
DeviceCare SFE100	Notebook, PC or tablet with Microsoft Windows system	▪ CDI-RJ45 service interface ▪ WLAN interface ▪ Fieldbus protocol	→ 97
FieldCare SFE500	Notebook, PC or tablet with Microsoft Windows system	▪ CDI-RJ45 service interface ▪ WLAN interface ▪ Fieldbus protocol	→ 97

Supported operating tools	Operating unit	Interface	Additional information
Field Xpert	SMT70/77/50	▪ All fieldbus protocols ▪ WLAN interface ▪ Bluetooth ▪ CDI-RJ45 service interface	Operating Instructions BA01202S Device description files: Use update function of handheld terminal
SmartBlue app	Smart phone or tablet with iOs or Android	WLAN	→ 📄 97

Other operating tools based on FDT technology with a device driver such as DTM/iDTM or DD/EDD can be used for device operation. These operating tools are available from the individual manufacturers. Integration into the following operating tools, among others, is supported:

- FactoryTalk AssetCentre (FTAC) from Rockwell Automation → www.rockwellautomation.com
- Process Device Manager (PDM) from Siemens → www.siemens.com
- Asset Management Solutions (AMS) from Emerson → www.emersonprocess.com
- FieldCommunicator 375/475 from Emerson → www.emersonprocess.com
- Field Device Manager (FDM) from Honeywell → www.process.honeywell.com
- FieldMate from Yokogawa → www.yokogawa.com
- PACTWare → www.pactware.com

The related device description files are available: www.endress.com → Downloads

Web server

Thanks to the integrated Web server the device can be operated and configured via a Web browser and via the service interface (CDI-RJ45) or via the WLAN interface. The structure of the operating menu is the same as for the local display. In addition to the measured values, device status information is also displayed and allows users to monitor the status of the device. Furthermore the device data can be managed and the network parameters can be configured.

A device that has a WLAN interface (can be ordered as an option) is required for the WLAN connection: order code for "Display; operation", option G "4-line, illuminated; touch control + WLAN". The device acts as an Access Point and enables communication by computer or a mobile handheld terminal.

Supported functions
Data exchange between the operating unit (such as a notebook for example) and the measuring device:
- Upload the configuration from the measuring device (XML format, configuration backup)
- Save the configuration to the measuring device (XML format, restore configuration)
- Export event list (.csv file)
- Export parameter settings (.csv file or PDF file, document the measuring point configuration)
- Export the Heartbeat verification log (PDF file, only available with the "Heartbeat Verification" application package)
- Flash firmware version for device firmware upgrade, for instance
- Download driver for system integration
- Visualize up to 1000 saved measured values (only available with the **Extended HistoROM** application package → 📄 94)

Web server special documentation → 📄 99

HistoROM data management

The measuring device features HistoROM data management. HistoROM data management comprises both the storage and import/export of key device and process data, making operation and servicing far more reliable, secure and efficient.

When the device is delivered, the factory settings of the configuration data are stored as a backup in the device memory. This memory can be overwritten with an updated data record, for example after commissioning.

Additional information on the data storage concept

There are different types of data storage units in which device data are stored and used by the device:

	HistoROM backup	T-DAT	S-DAT

Available data	▪ Event logbook such as diagnostic events for example
	▪ Parameter data record backup
	▪ Device firmware package
	▪ Driver for system integration for exporting via Web server, e.g:
	  ▪ GSD for PROFIBUS DP
	  ▪ GSD for PROFIBUS PA
	  ▪ GSDML for PROFINET
	  ▪ EDS for EtherNet/IP
	  ▪ DD for FOUNDATION Fieldbus
		▪ Measured value logging ("Extended HistoROM" order option)
		▪ Current parameter data record (used by firmware at run time)
		▪ Maximum indicators (min/max values)
		▪ Totalizer values
			▪ Sensor data: nominal diameter etc.
			▪ Serial number
			▪ Calibration data
			▪ Device configuration (e.g. SW options, fixed I/O or multi I/O)

Storage location	Fixed on the user interface board in the connection compartment	Attachable to the user interface board in the connection compartment	In the sensor plug in the transmitter neck part

Data backup

Automatic
- The most important device data (sensor and transmitter) are automatically saved in the DAT modules
- If the transmitter or measuring device is replaced: once the T-DAT containing the previous device data has been exchanged, the new measuring device is ready for operation again immediately without any errors
- If the sensor is replaced: once the sensor has been replaced, new sensor data are transferred from the S-DAT in the measuring device and the measuring device is ready for operation again immediately without any errors
- If exchanging the electronics module (e.g. I/O electronics module): Once the electronics module has been replaced, the software of the module is compared against the current device firmware. The module software is upgraded or downgraded where necessary. The electronics module is available for use immediately afterwards and no compatibility problems occur.

Manual
Additional parameter data record (complete parameter settings) in the integrated device memory HistoROM backup for:
- Data backup function
  Backup and subsequent restoration of a device configuration in the device memory HistoROM backup
- Data comparison function
  Comparison of the current device configuration with the device configuration saved in the device memory HistoROM backup

Data transmission

Manual
- Transfer of a device configuration to another device using the export function of the specific operating tool, e.g. with FieldCare, DeviceCare or Web server: to duplicate the configuration or to store in an archive (e.g. for backup purposes)
- Transmission of the drivers for system integration via Web server, e.g.:
  - GSD for PROFIBUS DP
  - GSD for PROFIBUS PA
  - GSDML for PROFINET
  - EDS for EtherNet/IP
  - DD for FOUNDATION Fieldbus

Event list

Automatic
- Chronological display of up to 20 event messages in the events list
- If the **Extended HistoROM** application package (order option) is enabled: up to 100 event messages are displayed in the events list along with a time stamp, plain text description and remedial measures
- The events list can be exported and displayed via a variety of interfaces and operating tools e.g. DeviceCare, FieldCare or Web server

Data logging

Manual
If the **Extended HistoROM** application package (order option) is enabled:
- Record up to 1 000 measured values via 1 to 4 channels
- User configurable recording interval
- Record up to 250 measured values via each of the 4 memory channels
- Export the measured value log via a variety of interfaces and operating tools e.g. FieldCare, DeviceCare or web server

Certificates and approvals

Current certificates and approvals that are available for the product can be selected via the Product Configurator at www.endress.com:

1. Select the product using the filters and search field.
2. Open the product page.
3. Select **Configuration**.

CE mark

The device meets the legal requirements of the applicable EU Directives. These are listed in the corresponding EU Declaration of Conformity along with the standards applied.

Endress+Hauser confirms successful testing of the device by affixing to it the CE mark.

UKCA marking

The device meets the legal requirements of the applicable UK regulations (Statutory Instruments). These are listed in the UKCA Declaration of Conformity along with the designated standards. By selecting the order option for UKCA marking, Endress+Hauser confirms a successful evaluation and testing of the device by affixing the UKCA mark.

Contact address Endress+Hauser UK:
Endress+Hauser Ltd.
Floats Road
Manchester M23 9NF
United Kingdom
www.uk.endress.com

RCM mark

The measuring system meets the EMC requirements of the "Australian Communications and Media Authority (ACMA)".

Ex approval

The measuring device is certified for use in hazardous areas and the relevant safety instructions are provided in the separate "Safety Instructions" (XA) document. Reference is made to this document on the nameplate.

The separate Ex documentation (XA) containing all the relevant explosion protection data is available from your Endress+Hauser sales center.

ATEX/IECEx

Currently, the following versions for use in hazardous areas are available:

Ex db eb

Category	Type of protection
II1/2G	Ex db eb ia IIC T6...T1 Ga/Gb
II2G	Ex db eb ia IIC T6...T1 Gb

Ex db

Category	Type of protection
II1/2G	Ex db ia IIC T6...T1 Ga/Gb
II2G	Ex db ia IIC T6...T1 Gb

Ex ec

Category	Type of protection
II3G	Ex ec IIC T5...T1 Gc

Ex tb

Category	Type of protection
II2D	Ex tb IIIC T** °C Db

$_{c}CSA_{US}$

Currently, the following versions for use in hazardous areas are available:

IS (Ex i) and XP (Ex d)
Class I, II, III Division 1 Groups A-G

NI (Ex ec)
Class I Division 2 Groups A - D

Ex db eb
- Class I, Zone 1 AEx/ Ex db eb ia IIC T6...T1 Ga/Gb
- Class I, Zone 1 AEx/Ex db eb ia IIC T6...T1 Gb

Ex db
- Class I, Zone 1 AEx/ Ex db ia IIC T6...T1 Ga/Gb
- Class I, Zone 1 AEx/ Ex db ia IIC T6...T1 Gb

Ex ec
Class I, Zone 2 AEx/ Ex ec IIC T5...T1 Gc

Ex tb
Zone 21 AEx/ Ex tb IIIC T** °C Db

Functional safety

The measuring device can be used for flow monitoring systems (min., max., range) up to SIL 2 (single-channel architecture; order code for "Additional approval", option LA) and SIL 3 (multi-channel architecture with homogeneous redundancy) and is independently evaluated and certified in accordance with IEC 61508.

The following types of monitoring in safety equipment are possible:
- Mass flow
- Volume flow
- Density

Functional Safety Manual with information on the SIL device → 📄 98

HART certification

HART interface

The measuring device is certified and registered by the FieldComm Group. The measuring system meets all the requirements of the following specifications:
- Certified according to HART 7
- The device can also be operated with certified devices of other manufacturers (interoperability)

FOUNDATION Fieldbus certification	**FOUNDATION Fieldbus interface** The measuring device is certified and registered by the FieldComm Group. The measuring system meets all the requirements of the following specifications: ▪ Certified in accordance with FOUNDATION Fieldbus H1 ▪ Interoperability Test Kit (ITK), revision version 6.2.0 (certificate available on request) ▪ Physical Layer Conformance Test ▪ The device can also be operated with certified devices of other manufacturers (interoperability)
Certification PROFIBUS	**PROFIBUS interface** The measuring device is certified and registered by the PNO (PROFIBUS Nutzerorganisation e.V./ PROFIBUS User Organization). The measuring system meets all the requirements of the following specifications: ▪ Certified according to PA Profile 3.02 ▪ The device can also be operated with certified devices of other manufacturers (interoperability)
EtherNet/IP certification	The measuring device is certified and registered by the ODVA (Open Device Vendor Association). The measuring system meets all the requirements of the following specifications: ▪ Certified in accordance with the ODVA Conformance Test ▪ EtherNet/IP Performance Test ▪ EtherNet/IP PlugFest compliance ▪ The device can also be operated with certified devices of other manufacturers (interoperability)

Certification PROFINET	**PROFINET interface**
	The measuring device is certified and registered by the PNO (PROFIBUS Nutzerorganisation e.V. / PROFIBUS User Organization). The measuring system meets all the requirements of the following specifications:
	▪ Certified according to:
	  ▪ Test specification for PROFINET devices
	  ▪ PROFINET Security Level 2– Netload Class 2 0 Mbps
	▪ The device can also be operated with certified devices of other manufacturers (interoperability)
	▪ The device supports PROFINET S2 system redundancy.

Certification PROFINET with Ethernet-APL	**PROFINET interface**
	The measuring device is certified and registered by the PNO (PROFIBUS Nutzerorganisation e.V. / PROFIBUS User Organization). The measuring system meets all the requirements of the following specifications:
	▪ Certified according to:
	  ▪ Test specification for PROFINET devices
	  ▪ PROFINET PA Profile 4
	  ▪ PROFINET Security Level 2– Netload Class 2 0 Mbps
	  ▪ APL conformance test
	▪ The device can also be operated with certified devices of other manufacturers (interoperability)
	▪ The device supports PROFINET S2 system redundancy.

Radio approval	The measuring device has radio approval. For detailed information on the radio approval, see the Special Documentation → 99
Additional certification	**CRN approval** Some device versions have CRN approval. A CRN-approved process connection with a CSA approval must be ordered for a CRN-approved device. **Tests and certificates** ▪ EN10204-3.1 material certificate, wetted parts and sensor housing ▪ Pressure test, internal process, inspection certificate ▪ PMI test (XRF), internal procedure, wetted parts, test report

Other standards and guidelines

- EN 60529
  Degrees of protection provided by enclosures (IP code)
- IEC/EN 60068-2-6
  Environmental influences: Test procedure - Test Fc: vibrate (sinusoidal).
- IEC/EN 60068-2-31
  Environmental influences: Test procedure - Test Ec: shocks due to rough handling, primarily for devices.
- EN 61010-1
  Safety requirements for electrical equipment for measurement, control and laboratory use - general requirements
- IEC/EN 61326-2-3
  Emission in accordance with Class A requirements. Electromagnetic compatibility (EMC requirements).
- NAMUR NE 21
  Electromagnetic compatibility (EMC) of industrial process and laboratory control equipment
- NAMUR NE 32
  Data retention in the event of a power failure in field and control instruments with microprocessors
- NAMUR NE 43
  Standardization of the signal level for the breakdown information of digital transmitters with analog output signal.
- NAMUR NE 53
  Software of field devices and signal-processing devices with digital electronics
- NAMUR NE 105
  Specifications for integrating fieldbus devices in engineering tools for field devices
- NAMUR NE 107
  Self-monitoring and diagnosis of field devices
- NAMUR NE 131
  Requirements for field devices for standard applications
- NAMUR NE 132
  Coriolis mass meter
- ETSI EN 300 328
  Guidelines for 2.4 GHz radio components.
- EN 301489
  Electromagnetic compatibility and radio spectrum matters (ERM).

Ordering information

Detailed ordering information is available from your nearest sales organization www.addresses.endress.com or in the Product Configurator at www.endress.com:

1. Select the product using the filters and search field.
2. Open the product page.
3. Select **Configuration**.

Product Configurator - the tool for individual product configuration

- Up-to-the-minute configuration data
- Depending on the device: Direct input of measuring point-specific information such as measuring range or operating language
- Automatic verification of exclusion criteria
- Automatic creation of the order code and its breakdown in PDF or Excel output format
- Ability to order directly in the Endress+Hauser Online Shop

Application packages

Many different application packages are available to enhance the functionality of the device. Such packages might be needed to address safety aspects or specific application requirements.

The application packages can be ordered with the device or subsequently from Endress+Hauser. Detailed information on the order code in question is available from your local Endress+Hauser sales center or on the product page of the Endress+Hauser website: www.endress.com.

Detailed information on the application packages:
Special Documentation for the device → 98

Diagnostic functionality

Order code for "Application package", option EA "Extended HistoROM"

Comprises extended functions concerning the event log and the activation of the measured value memory.

Event log:
Memory volume is extended from 20 message entries (standard version) to up to 100 entries.

Data logging (line recorder):
- Memory capacity for up to 1000 measured values is activated.
- 250 measured values can be output via each of the 4 memory channels. The recording interval can be defined and configured by the user.
- Measured value logs can be accessed via the local display or operating tool e.g. FieldCare, DeviceCare or Web server.

For detailed information, see the Operating Instructions for the device.

Heartbeat Technology

Order code for "Application package", option EB "Heartbeat Verification + Monitoring"

Heartbeat Verification
Meets the requirement for traceable verification to DIN ISO 9001:2008 Chapter 7.6 a) "Control of monitoring and measuring equipment".
- Functional testing in the installed state without interrupting the process.
- Traceable verification results on request, including a report.
- Simple testing process via local operation or other operating interfaces.
- Clear measuring point assessment (pass/fail) with high test coverage within the framework of manufacturer specifications.
- Extension of calibration intervals according to operator's risk assessment.

Heartbeat Monitoring
Continuously supplies data, which are characteristic of the measuring principle, to an external condition monitoring system for the purpose of preventive maintenance or process analysis. These data enable the operator to:
- Draw conclusions - using these data and other information - about the impact the process influences (e.g. corrosion, abrasion, formation of buildup etc.) have on measuring performance over time.
- Schedule servicing in time.
- Monitor the process or product quality, e.g. gas pockets.

For detailed information, see the Special Documentation for the device.

Concentration measurement

Order code for "Application package", option ED "Concentration"

Calculation and outputting of fluid concentrations.

The measured density is converted to the concentration of a substance of a binary mixture using the "Concentration" application package:
- Choice of predefined fluids (e.g. various sugar solutions, acids, alkalis, salts, ethanol etc.).
- Common or user-defined units (°Brix, °Plato, % mass, % volume, mol/l etc.) for standard applications.
- Concentration calculation from user-defined tables.

For detailed information, see the Special Documentation for the device.

Special density

Order code for "Application package", option EE "Special density"

Many applications use density as a key measured value for monitoring quality or controlling processes. The device measures the density of the fluid as standard and makes this value available to the control system.

The "Special Density" application package offers high-precision density measurement over a wide density and temperature range particularly for applications subject to varying process conditions.

For detailed information, see the Operating Instructions for the device.

OPC-UA Server

Order code for "Application package", option EL "OPC-UA Server"

The application package provides an integrated OPC-UA server for comprehensive device services for IoT and SCADA applications.

For detailed information, see the Special Documentation for the device.

Accessories

Various accessories, which can be ordered with the device or subsequently from Endress+Hauser, are available for the device. Detailed information on the order code in question is available from your local Endress+Hauser sales center or on the product page of the Endress+Hauser website: www.endress.com.

Device-specific accessories

For the transmitter

Accessories	Description
Proline 300 transmitter	Transmitter for replacement or storage. Use the order code to define the following specifications: ▪ Approvals ▪ Output ▪ Input ▪ Display/operation ▪ Housing ▪ Software Order code: 8X3BXX Installation Instructions EA01200D
Remote display and operating module DKX001	▪ If ordered directly with the measuring device: Order code for "Display; operation", option O "Remote display 4-line, illuminated; 10 m (30 ft) cable; touch control" ▪ If ordered separately: ▪ Measuring device: order code for "Display; operation", option M "W/o, prepared for remote display" ▪ DKX001: Via the separate product structure DKX001 ▪ If ordered subsequently: DKX001: Via the separate product structure DKX001 **Mounting bracket for DKX001** ▪ If ordered directly: order code for "Accessory enclosed", option RA "Mounting bracket, pipe 1/2'" ▪ If ordered subsequently: order number: 71340960 **Connecting cable (replacement cable)** Via the separate product structure: DKX002 Further information on display and operating module DKX001→ 79. Special Documentation SD01763D

External WLAN antenna	External WLAN antenna with 1.5 m (59.1 in) connecting cable and two angle brackets. Order code for "Accessory enclosed", option P8 "Wireless antenna wide area". ▪ The external WLAN antenna is not suitable for use in hygienic applications. ▪ Additional information regarding the WLAN interface → 86. Order number: 71351317 Installation Instructions EA01238D
Weather protection cover	Is used to protect the measuring device from the effects of the weather: e.g. rainwater, excess heating from direct sunlight. Order number: 71343505 Installation Instructions EA01160D

Communication-specific accessories

Accessories	Description
Commubox FXA195 HART	For intrinsically safe HART communication with FieldCare via the USB interface. Technical Information TI00404F
HART Loop Converter HMX50	Is used to evaluate and convert dynamic HART process variables to analog current signals or limit values. ▪ Technical Information TI00429F ▪ Operating Instructions BA00371F
Fieldgate FXA42	Is used to transmit the measured values of connected 4 to 20 mA analog measuring devices, as well as digital measuring devices ▪ Technical Information TI01297S ▪ Operating Instructions BA01778S ▪ Product page: www.endress.com/fxa42
Field Xpert SMT50	The Field Xpert SMT70 tablet PC for device configuration enables mobile plant asset management in non-hazardous areas. It is suitable for commissioning and maintenance staff to manage field instruments with a digital communication interface and to record progress. This tablet PC is designed as an all-in-one solution with a preinstalled driver library and is an easy-to-use, touch-sensitive tool which can be used to manage field instruments throughout their entire life cycle. ▪ Technical Information TI01342S ▪ Operating Instructions BA01709S ▪ Product page: www.endress.com/smt50
Field Xpert SMT70	The Field Xpert SMT70 tablet PC for device configuration enables mobile plant asset management in hazardous and non-hazardous areas. It is suitable for commissioning and maintenance staff to manage field instruments with a digital communication interface and to record progress. This tablet PC is designed as an all-in-one solution with a preinstalled driver library and is an easy-to-use, touch-sensitive tool which can be used to manage field instruments throughout their entire life cycle. ▪ Technical Information TI01342S ▪ Operating Instructions BA01709S ▪ Product page: www.endress.com/smt70
Field Xpert SMT77	The Field Xpert SMT77 tablet PC for device configuration enables mobile plant asset management in areas categorized as Ex Zone 1. ▪ Technical Information TI01418S ▪ Operating Instructions BA01923S ▪ Product page: www.endress.com/smt77

Service-specific accessories

Accessory	Description
Applicator	Software for selecting and sizing Endress+Hauser measuring devices: ▪ Choice of measuring devices with industrial requirements ▪ Calculation of all the necessary data for identifying the optimum flowmeter: e.g. nominal diameter, pressure loss, flow velocity and accuracy. ▪ Graphic illustration of the calculation results ▪ Determination of the partial order code, administration, documentation and access to all project-related data and parameters over the entire life cycle of a project. Applicator is available: ▪ Via the Internet: https://portal.endress.com/webapp/applicator ▪ As a downloadable DVD for local PC installation.
W@M	W@M Life Cycle Management Improved productivity with information at your fingertips. Data relevant to a plant and its components is generated from the first stages of planning and during the asset's complete life cycle. W@M Life Cycle Management is an open and flexible information platform with online and on-site tools. Instant access for your staff to current, in-depth data shortens your plant's engineering time, speeds up procurement processes and increases plant uptime. Combined with the right services, W@M Life Cycle Management boosts productivity in every phase. For more information, see: www.endress.com/lifecyclemanagement
FieldCare	FDT-based plant asset management tool from Endress+Hauser. It can configure all smart field units in your system and helps you manage them. By using the status information, it is also a simple but effective way of checking their status and condition. Operating Instructions BA00027S and BA00059S
DeviceCare	Tool for connecting and configuring Endress+Hauser field devices. Innovation brochure IN01047S

System components

Accessories	Description
Memograph M graphic data manager	The Memograph M graphic data manager provides information on all the relevant measured variables. Measured values are recorded correctly, limit values are monitored and measuring points analyzed. The data are stored in the 256 MB internal memory and also on a SD card or USB stick. ▪ Technical Information TI00133R ▪ Operating Instructions BA00247R
Cerabar M	The pressure transmitter for measuring the absolute and gauge pressure of gases, steam and liquids. It can be used to read in the operating pressure value. ▪ Technical Information TI00426P and TI00436P ▪ Operating Instructions BA00200P and BA00382P
Cerabar S	The pressure transmitter for measuring the absolute and gauge pressure of gases, steam and liquids. It can be used to read in the operating pressure value. ▪ Technical Information TI00383P ▪ Operating Instructions BA00271P
iTEMP	The temperature transmitters can be used in all applications and are suitable for the measurement of gases, steam and liquids. They can be used to read in the medium temperature. "Fields of Activity" document FA00006T

Documentation

For an overview of the scope of the associated Technical Documentation, refer to the following:
- *Device Viewer* (www.endress.com/deviceviewer): Enter serial number from nameplate.
- *Endress+Hauser Operations app*: Enter serial number from nameplate or scan matrix code on nameplate.

Standard documentation

Brief Operating Instructions

Brief Operating Instructions for the sensor

Measuring device	Documentation code
Proline Cubemass C	KA01217D

Brief Operating Instructions for the transmitter

Measuring device	Documentation code							
	HART	FOUNDATION Fieldbus	PROFIBUS PA	PROFIBUS DP	Modbus RS485	EtherNet/IP	PROFINET	PROFINET with Ethernet-APL
Proline 300	KA01309D	KA01229D	KA01227D	KA01386D	KA01311D	KA01339D	KA01341D	KA01517D

Operating Instructions

Measuring device	Documentation code							
	HART	FOUNDATION Fieldbus	PROFIBUS PA	PROFIBUS DP	Modbus RS485	EtherNet/IP	PROFINET	PROFINET with Ethernet-APL
Cubemass C 300	BA01483D	BA01516D	BA01505D	BA01856D	BA01494D	BA01726D	BA01737D	BA02109D

Description of Device Parameters

Measuring device	Documentation code							
	HART	FOUNDATION Fieldbus	PROFIBUS PA	PROFIBUS DP	Modbus RS485	EtherNet/IP	PROFINET	PROFINET with Ethernet-APL
Cubemass 300	GP01086D	GP01095D	GP01087D	GP01138D	GP01088D	GP01116D	GP01117D	GP01171D

Supplementary device-dependent documentation

Safety instructions

Safety instructions for electrical equipment for hazardous areas.

Contents	Documentation code
ATEX/IECEx Ex d/Ex de	XA01480D
ATEX/IECEx Ex ec	XA01481D
cCSAus XP	XA01482D
cCSAus Ex d/ Ex de	XA01506D
cCSAus Ex nA	XA01508D
INMETRO Ex d/Ex de	XA01483D
INMETRO Ex ec	XA01484D
NEPSI Ex d/Ex de	XA01485D

Contents	Documentation code
NEPSI Ex nA	XA01486D
JPN Ex d	XA01777D

Remote display and operating module DKX001

Contents	Documentation code
ATEX/IECEx Ex i	XA01494D
ATEX/IECEx Ex ec	XA01498D
cCSAus IS	XA01499D
cCSAus Ex nA	XA01513D
INMETRO Ex i	XA01500D
INMETRO Ex ec	XA01501D
NEPSI Ex i	XA01502D
NEPSI Ex nA	XA01503D

Functional Safety Manual

Contents	Documentation code
Proline Cubemass 300	SD01726D

Special Documentation

Contents	Documentation code
Information on the Pressure Equipment Directive	SD01614D
Remote display and operating module DKX001	SD01763D
Radio approvals for WLAN interface for A309/A310 display module	SD01793D
OPC-UA server [1)]	SD02041D

1) This Special Documentation is only available for device versions with a HART output.

Contents	Documentation code							
	HART	FOUNDATION Fieldbus	PROFIBUS PA	PROFIBUS DP	Modbus RS485	PROFINET	EtherNet/IP	PROFINET with Ethernet-APL
Web server	SD01670D	SD01673D	SD01672D	SD02233D	SD01671D	SD01973D	SD01972D	SD02763D
Heartbeat Technology	SD01692D	SD01694D	SD01695D	SD02204D	SD01693D	SD01990D	SD01984D	SD02733D
Concentration measurement	SD01713D	SD01712D	SD01714D	SD02214D	SD01715D	SD02009D	SD02008	SD02737D

Installation Instructions

Contents	Comment
Installation instructions for spare part sets and accessories	Documentation code: specified for each individual accessory → 🗎 95.

Registered trademarks

HART®
Registered trademark of the FieldComm Group, Austin, Texas, USA

PROFIBUS®
Registered trademark of the PROFIBUS Nutzerorganisation e.V. (PROFIBUS User Organization), Karlsruhe, Germany

FOUNDATION™ Fieldbus
Registration-pending trademark of the FieldComm Group, Austin, Texas, USA

Modbus®
Registered trademark of SCHNEIDER AUTOMATION, INC.

EtherNet/IP™
Trademark of ODVA, Inc.

Ethernet-APL™
Registered trademark of the PROFIBUS Nutzerorganisation e.V. (PROFIBUS User Organization), Karlsruhe, Germany

PROFINET®
Registered trademark of the PROFIBUS Nutzerorganisation e.V. (PROFIBUS User Organization), Karlsruhe, Germany

TRI-CLAMP®
Registered trademark of Ladish & Co., Inc., Kenosha, USA

71574722

www.addresses.endress.com

Endress+Hauser
People for Process Automation